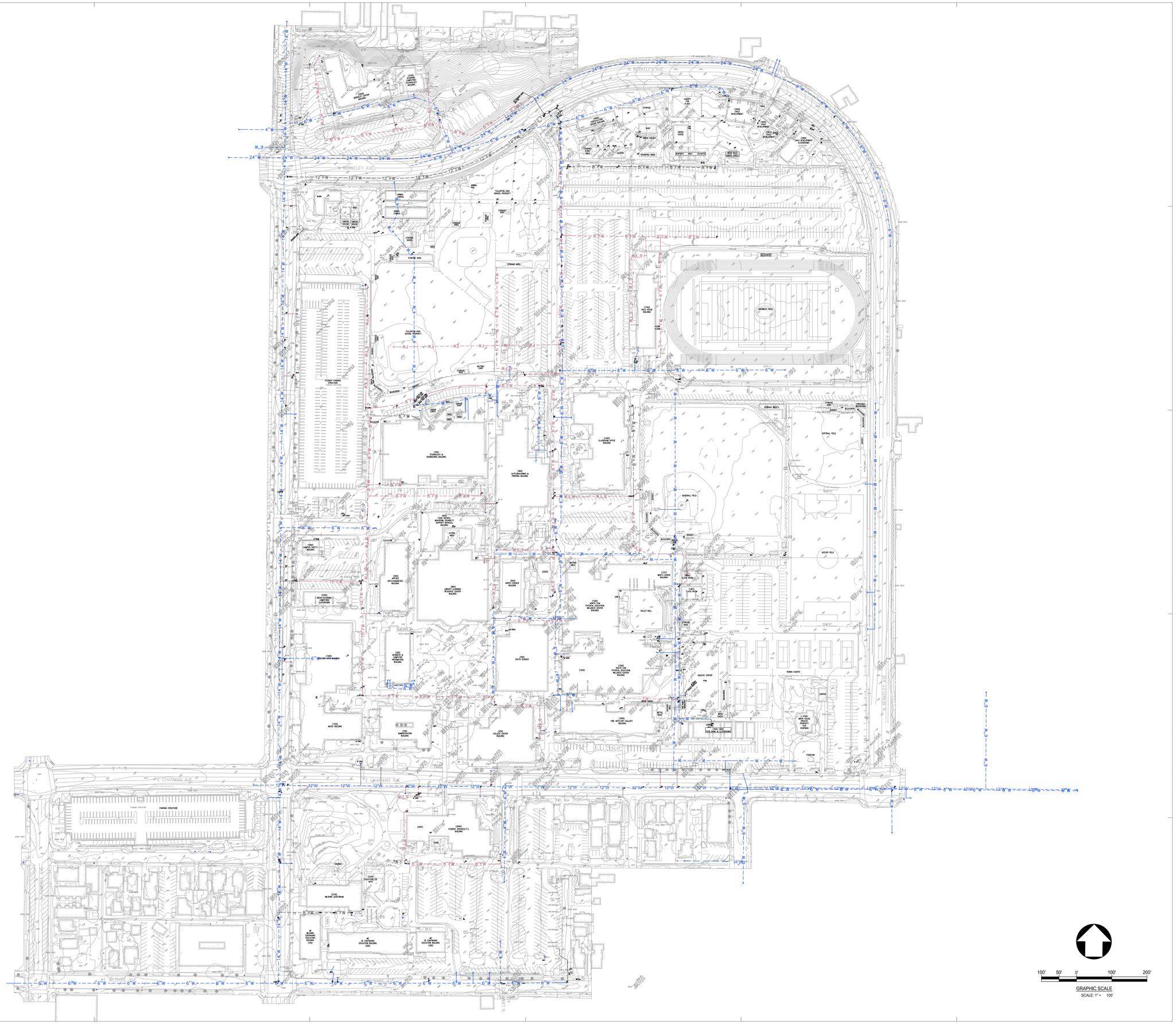

P S O M A S

555 South Flower Street, Suite 4300
Los Angeles, CA 90071
Tel. (213) 223-1400
Fax (213) 223-1444

Consultant

P2S Engineering, Inc.

5000 East Spring Street, 8th Floor
Long Beach, CA 90815-5218
T 562.497.2999 F 562.497.2990

www.p2seng.com

Project Title

SITE UTILITY

Owner

FULLERTON COLLEGE

321 E CHAPMAN AVENUE
FULLERTON, CA. 92832-2095

Revisions

Number	Description	Date
1	-	-

Designed
Drawn
Checked
Approved

Date 07/27/2017

Submittal

Scale 100 SCALE

Sheet Title

DOMESTIC WATER
SITE PLAN

Sheet Number

C101

P2S No. 8490

FILE PATH & NAME: W:\NOCCCD\FULLERTON COLLEGE\1\NOB130200\ENGR\EXHIB\EXHIB-X-WATR.DWG ALINA SANCHEZ
PLOT: Tuesday, August 01, 2017 4:03:55 PM

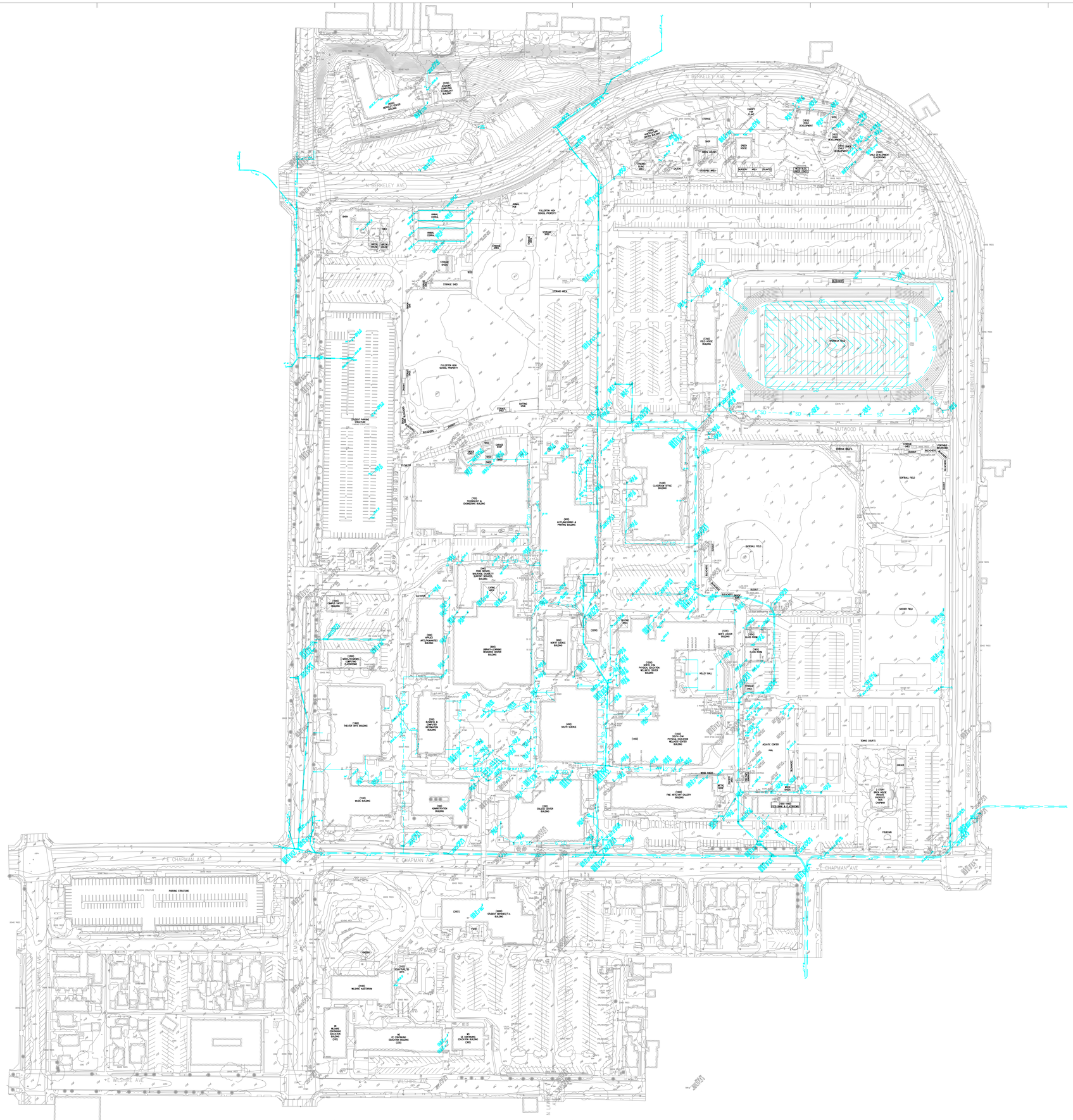

P S O M A S

555 South Flower Street, Suite 4300
Los Angeles, CA 90071
Tel. (213) 223-1400
Fax (213) 223-1444

Consultant

P2S Engineering, Inc.

5000 East Spring Street, 8th Floor
Long Beach, CA 90815-5218
T 562.497.2999 F 562.497.2990

www.p2seng.com

Project Title

SITE UTILITY

Owner

FULLERTON COLLEGE

321 E CHAPMAN AVENUE
FULLERTON, CA. 92832-2095

Revisions

Number	Description	Date
1	-	-

Designed
Drawn
Checked
Approved

Date 07/27/2017

Submittal

Scale 100 SCALE

Sheet Title

STORM DRAIN
SITE PLAN

Sheet Number

C102

P2S No. 8490

FILE PATH & NAME: W:\NOCCCD\FULLERTON COLLEGE\1\NOB130200\ENGR\EHIB\EXHIB-X-STRM.DWG ALINA SANCHEZ
PLOT: Tuesday, August 01, 2017 4:04:09 PM

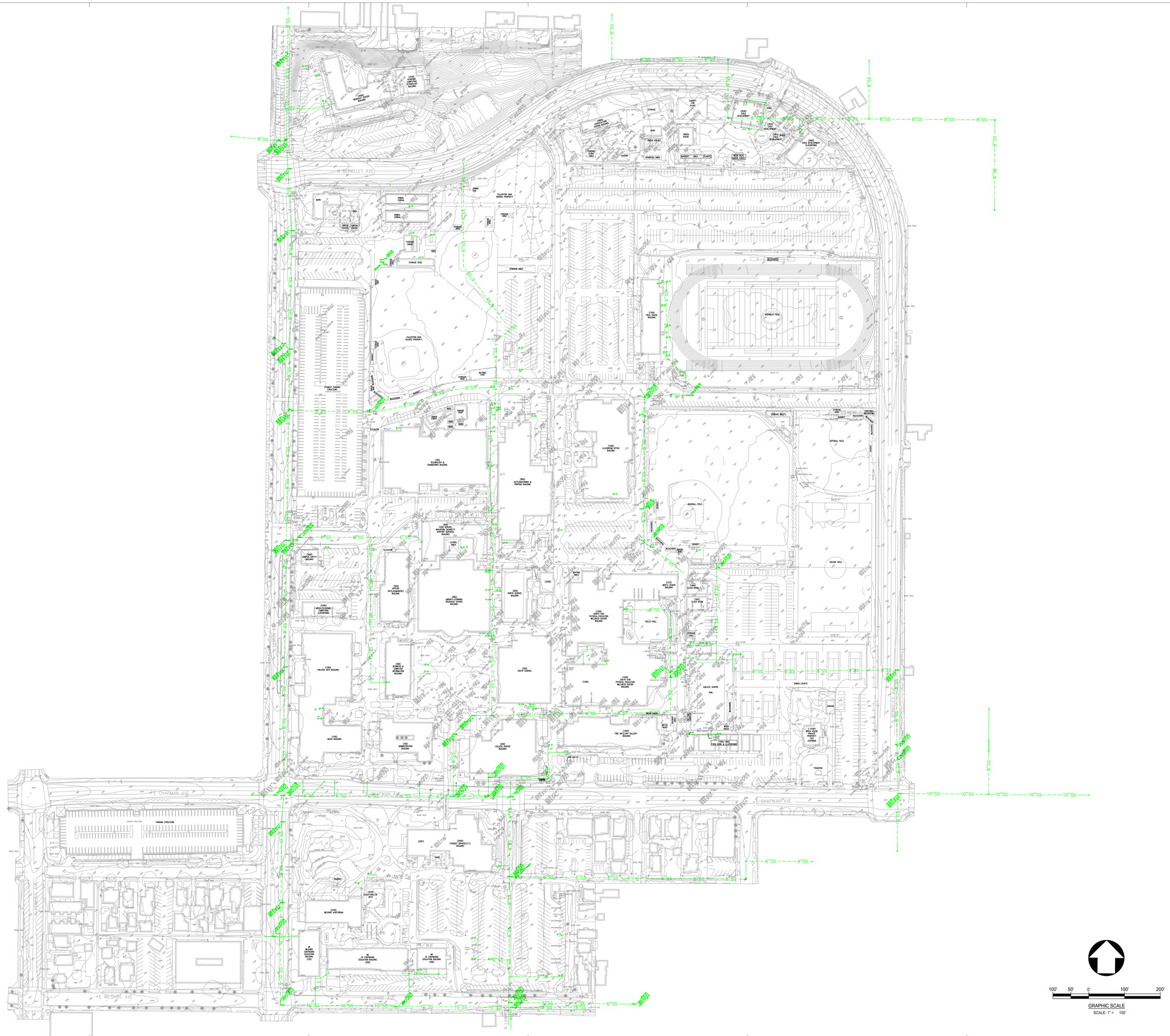

P S O M A S

555 South Flower Street, Suite 4300
Los Angeles, CA 90071
Tel. (213) 223-1400
Fax (213) 223-1444

Consultant

P2S Engineering, Inc.

5000 East Spring Street, 8th Floor
Long Beach, CA 90815-5218
T 562.497.2999 F 562.497.2990

www.p2seng.com

Project Title

SITE UTILITY

Owner

FULLERTON COLLEGE

321 E CHAPMAN AVENUE
FULLERTON, CA. 92832-2095

Revisions

Number	Description	Date
1	-	-

Designed
Drawn
Checked
Approved

Date 07/27/2017

Submittal

Scale 100 SCALE

Sheet Title

SANITARY SEWER
SITE PLAN

Sheet Number

C103

P2S No. 8490

FILE PATH & NAME: W:\NOCCCD\FULLERTON COLLEGE\1N0B130200\ENGR\EXHIB\EXHIB-X-SSWR.DWG ALINA SANCHEZ
PLOT: Tuesday, August 01, 2017 4:06:01 PM

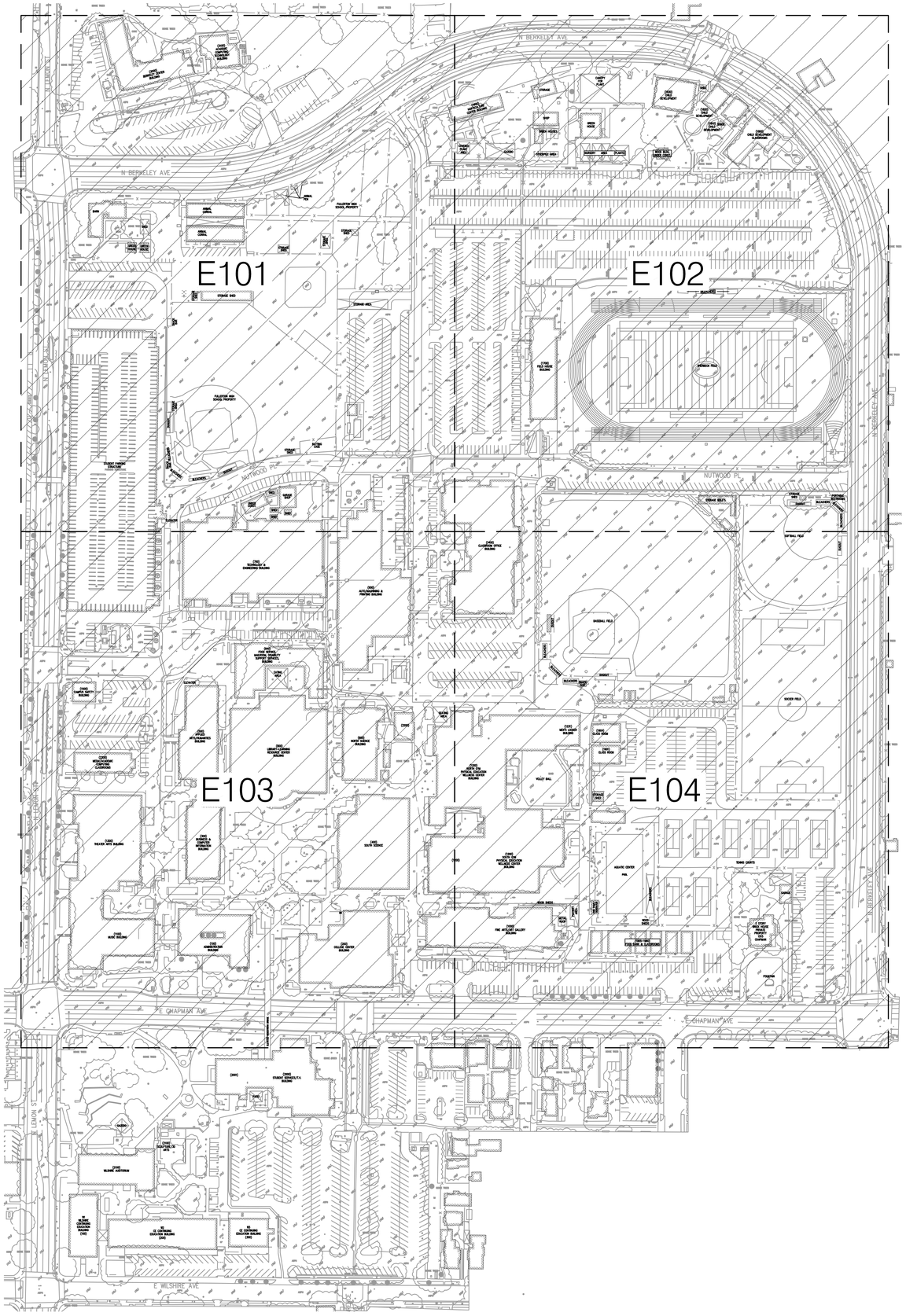

SCALE: 1" = 100'
0 100

P S O M A S

555 South Flower Street, Suite 4300
Los Angeles, CA 90071
Tel. (213) 223-1400
Fax (213) 223-1444

Consultant

P2S Engineering, Inc.

5000 East Spring Street, 8th Floor
Long Beach, CA 90815-5218
T 562.497.2999 F 562.497.2990

www.p2seng.com

Project Title

SITE UTILITY

Owner

FULLERTON COLLEGE

321 E CHAPMAN AVENUE
FULLERTON, CA. 92832-2095

Revisions

Number	Description	Date

Designed
Drawn
Checked
Approved

Date 07/27/2017

Submittal

Scale 1"=100'

Sheet Title

Overall Site
Electrical Plan

Sheet Number

E100

P2S No. 8723

FILE PATH & NAME: C:\USERS\GARNIS\DESKTOP\8723_E100 - STANDARD\8723_E100.DWG GUILLERMO ARIAS
PLOT: Thursday, July 27, 2017 2:44:31 PM

(*) CONDUCTORS INSTALLED PRIOR TO 2002, SIZE NOT VERIFIED.

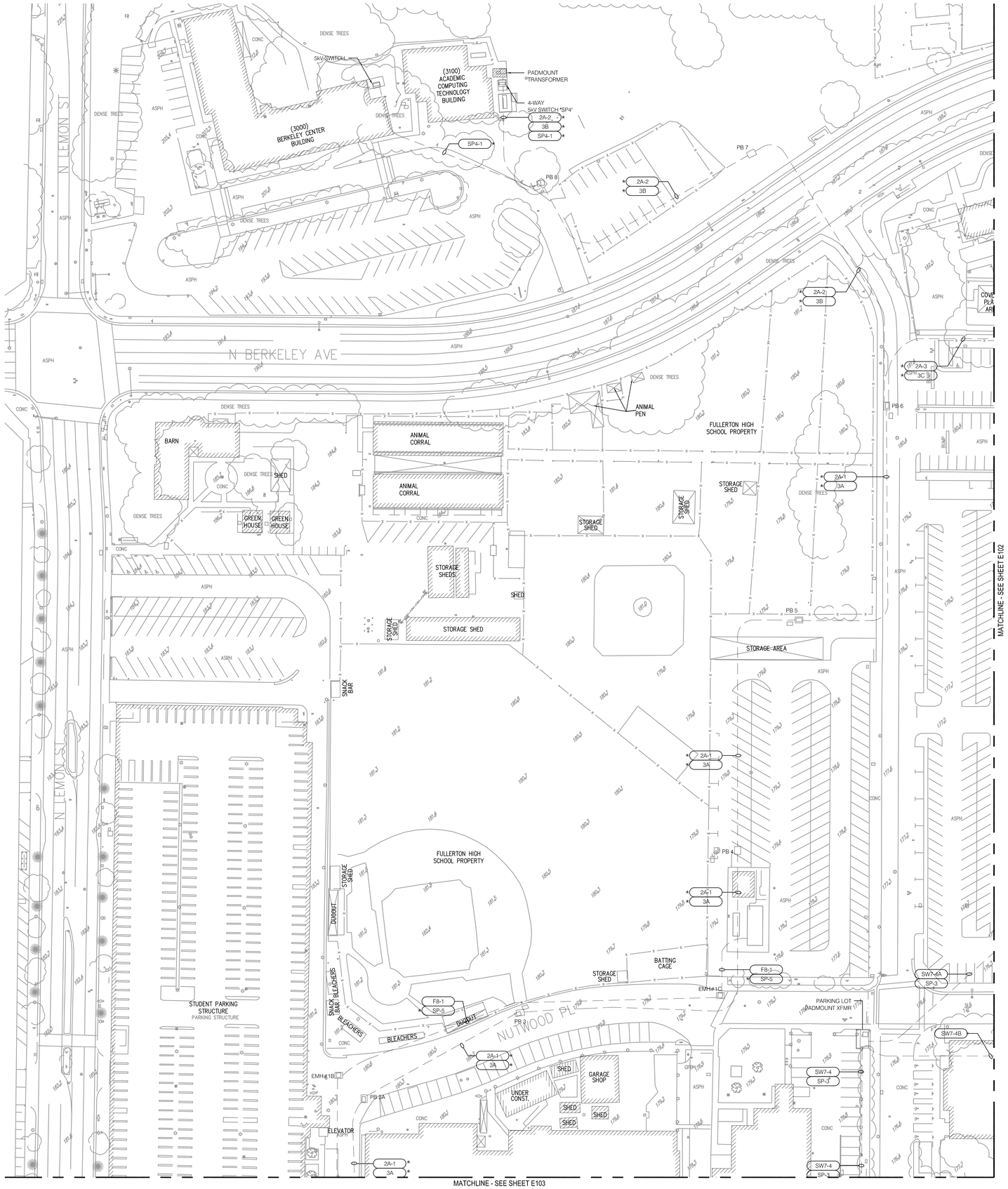

SCALE: 1" = 40'
0 40

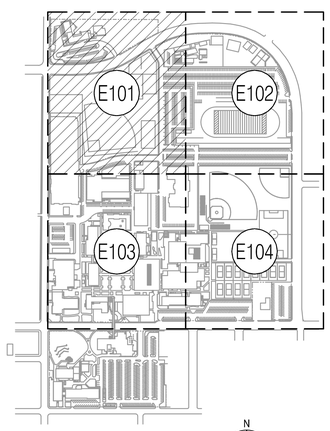

KEY MAP

P S O M A S

555 South Flower Street, Suite 4300
Los Angeles, CA 90071
Tel. (213) 223-1400
Fax (213) 223-1444

Consultant

P2S Engineering, Inc.

5000 East Spring Street, 8th Floor
Long Beach, CA 90815-5218
T 562.497.2999 F 562.497.2990

www.p2seng.com

Project Title

SITE UTILITY

Owner

FULLERTON COLLEGE

321 E CHAPMAN AVENUE
FULLERTON, CA. 92832-2095

Revisions

Number	Description	Date

Designed
Drawn
Checked
Approved

Date 07/27/2017

Submittal

Scale 1"=40'

Sheet Title

Enlarged Site Electrical Plan

Sheet Number

E101

P2S No. 8723

FILE PATH & NAME: C:\USERS\GARNIS\DESKTOP\8723_E101-STANDARD\8723_E101-DWG GUILLERMO ARIAS
PLOT: Thursday, July 27, 2017 2:41:32 PM

(*) CONDUCTORS INSTALLED PRIOR TO 2002, SIZE NOT VERIFIED.

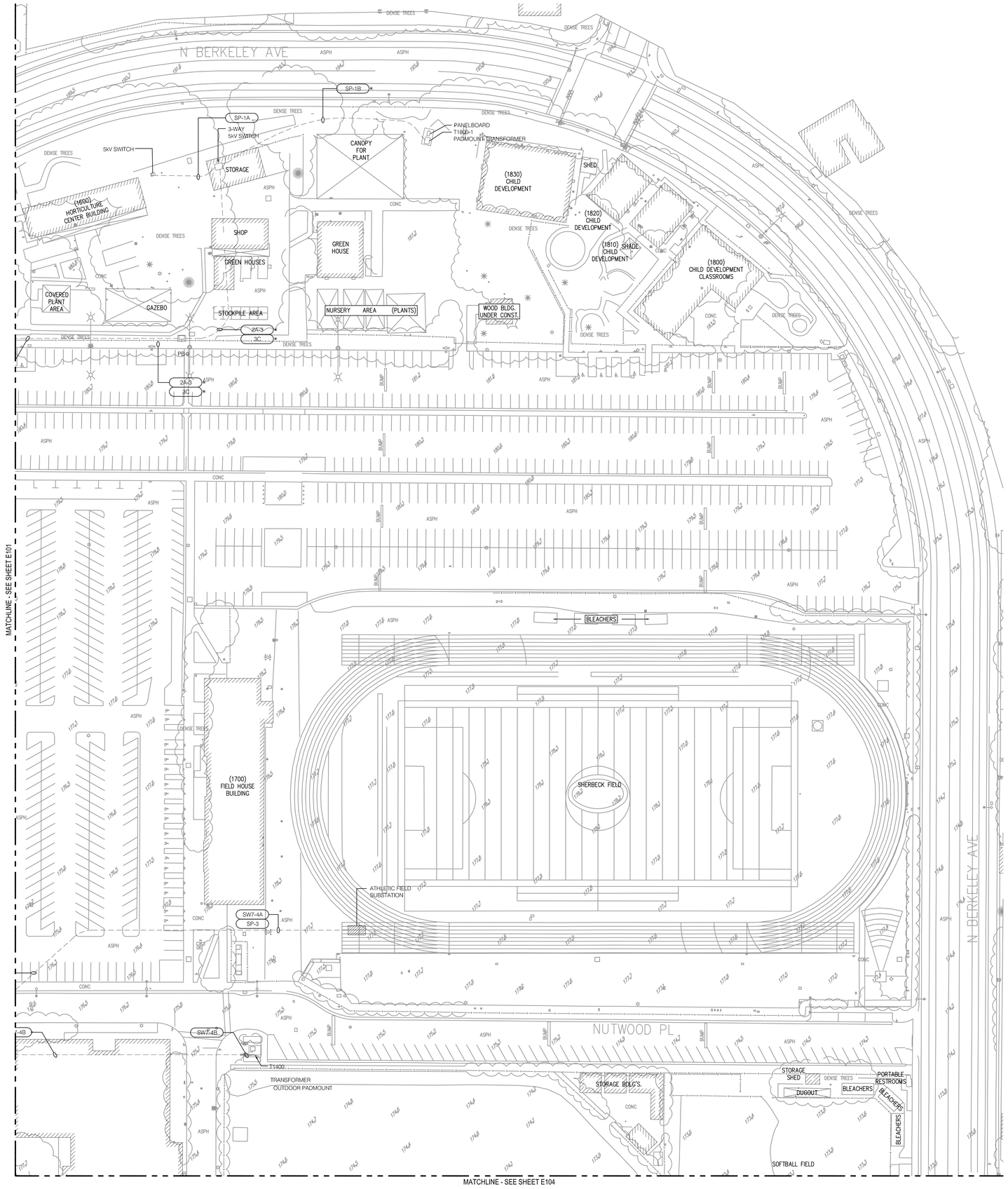

SCALE: 1" = 40'
0 40

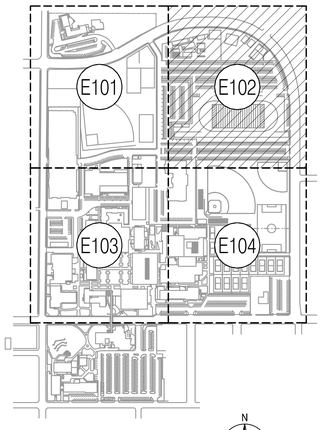

KEY MAP

P S O M A S

555 South Flower Street, Suite 4300
Los Angeles, CA 90071
Tel. (213) 223-1400
Fax (213) 223-1444

Consultant

P2S Engineering, Inc.

5000 East Spring Street, 8th Floor
Long Beach, CA 90815-5218
T 562.497.2999 F 562.497.2990

www.p2seng.com

Project Title

SITE UTILITY

Owner

FULLERTON COLLEGE

321 E CHAPMAN AVENUE
FULLERTON, CA. 92832-2095

Revisions

Number	Description	Date

Designed
Drawn
Checked
Approved

Date 07/27/2017

Submittal

Scale 1"=40'

Sheet Title

Enlarged Site Electrical Plan

Sheet Number

E102

P2S No. 8723

FILE PATH & NAME: C:\USERS\QARMAS\DESKTOP\JB723_E100 - STANDARD\JB723_E102.DWG GUILLERMO ARMAS
PLOT: Thursday, July 27, 2017 2:40:53 PM

(*) CONDUCTORS INSTALLED PRIOR TO 2002, SIZE NOT VERIFIED.

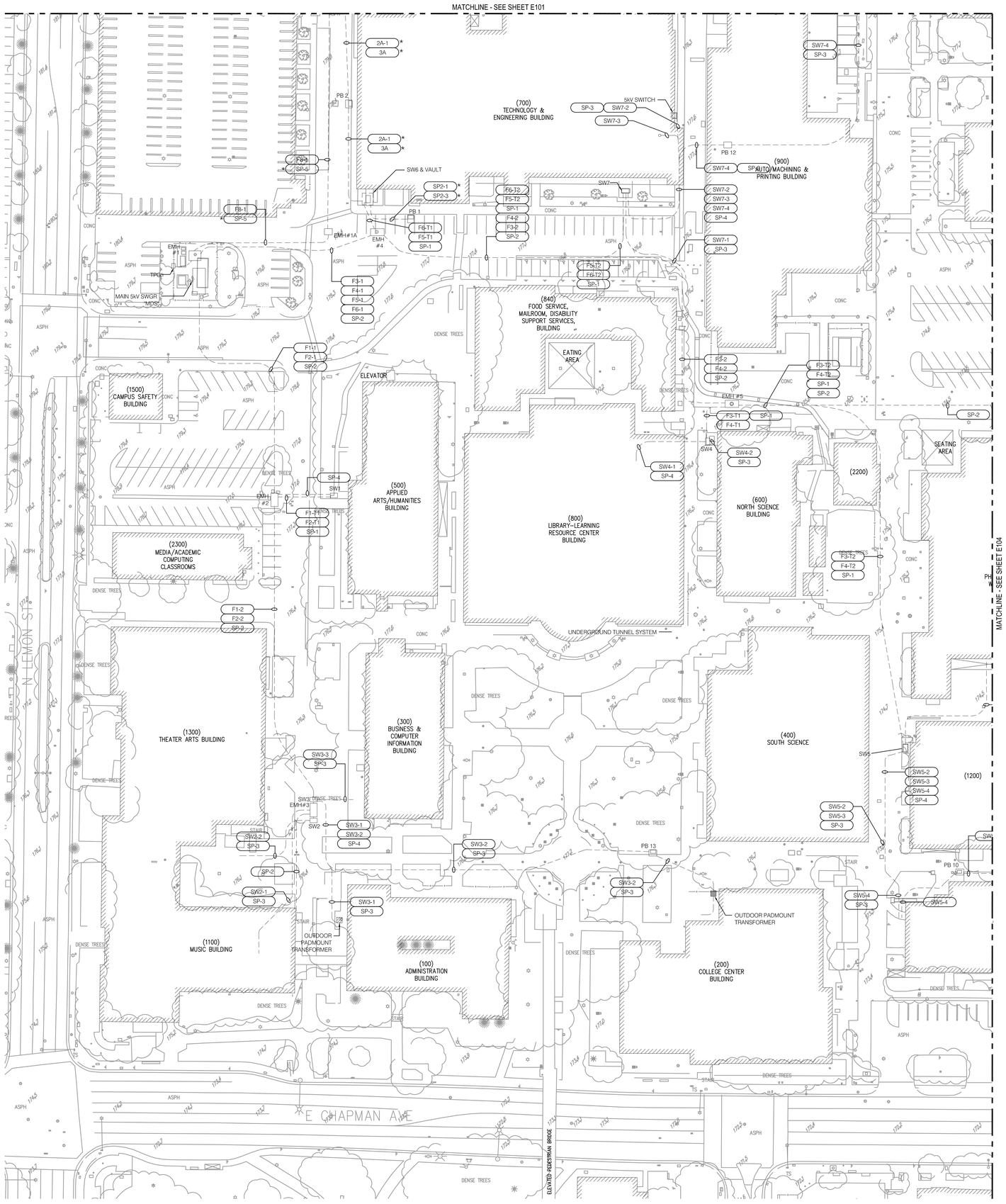

SCALE: 1" = 40'
0 40

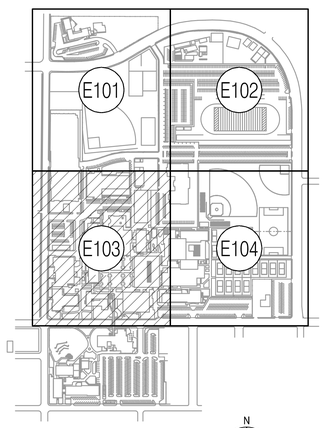

KEY MAP

P S O M A S

555 South Flower Street, Suite 4300
Los Angeles, CA 90071
Tel. (213) 223-1400
Fax (213) 223-1444

Consultant

P2S Engineering, Inc.

5000 East Spring Street, 8th Floor
Long Beach, CA 90815-5218
T 562.497.2999 F 562.497.2990

www.p2seng.com

Project Title

SITE UTILITY

Owner

FULLERTON COLLEGE

321 E CHAPMAN AVENUE
FULLERTON, CA. 92832-2095

Revisions

Number	Description	Date

Designed
Drawn
Checked
Approved

Date 07/27/2017

Submittal

Scale 1"=40'

Sheet Title

Enlarged Site Electrical Plan

Sheet Number

E103

P2S No. 8723

FILE PATH & NAME: C:\USERS\GARAN\DESKTOP\JA8723_E103-STANDARD\JA8723_E103.DWG GUILLERMO ARIAS
PLOT: Thursday, July 27, 2017 2:36:01 PM

(*) CONDUCTORS INSTALLED PRIOR TO 2002, SIZE NOT VERIFIED.

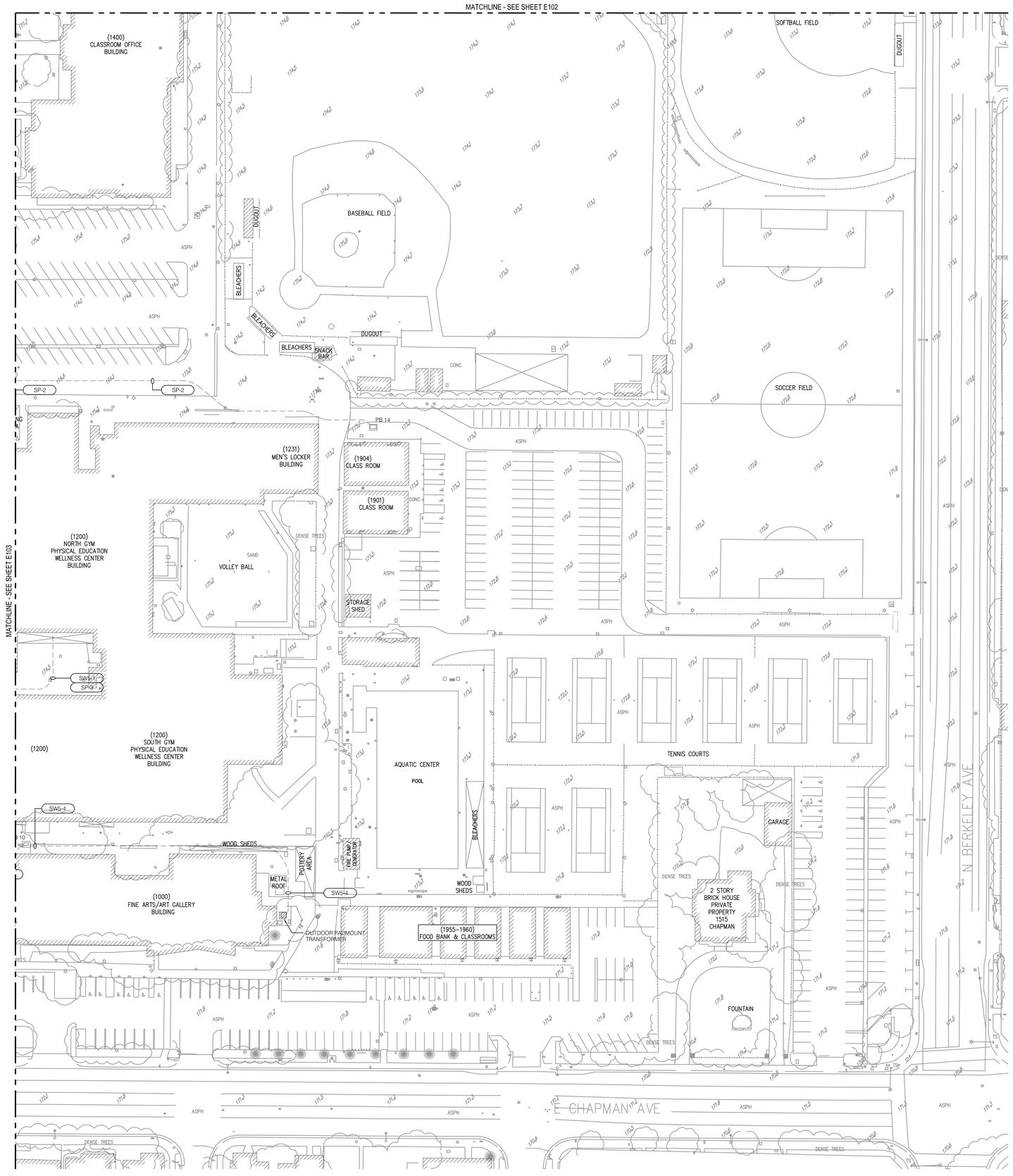

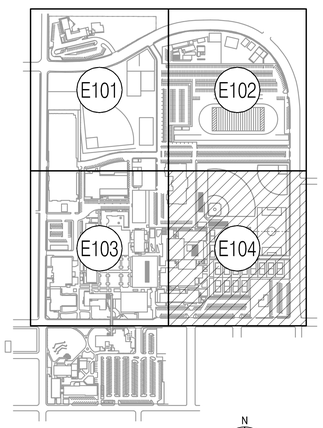

KEY MAP

P S O M A S

555 South Flower Street, Suite 4300
Los Angeles, CA 90071
Tel. (213) 223-1400
Fax (213) 223-1444

Consultant

P2S Engineering, Inc.

5000 East Spring Street, 8th Floor
Long Beach, CA 90815-5218
T 562.497.2999 F 562.497.2990

www.p2seng.com

Project Title

SITE UTILITY

Owner

FULLERTON COLLEGE

321 E CHAPMAN AVENUE
FULLERTON, CA. 92832-2095

Revisions

Number	Description	Date

Designed
Drawn
Checked
Approved

Date 07/27/2017

Submittal

Scale 1"=40'

Sheet Title

Enlarged Site Electrical Plan

Sheet Number

E104

P2S No. 8723

FILE PATH & NAME: C:\USERS\GARAN\DESKTOP\JB723_E100 - STANDARDS\JB723_E104.DWG GUILLERMO ARANS
PLOT: Thursday, July 27, 2017 2:40:10 PM

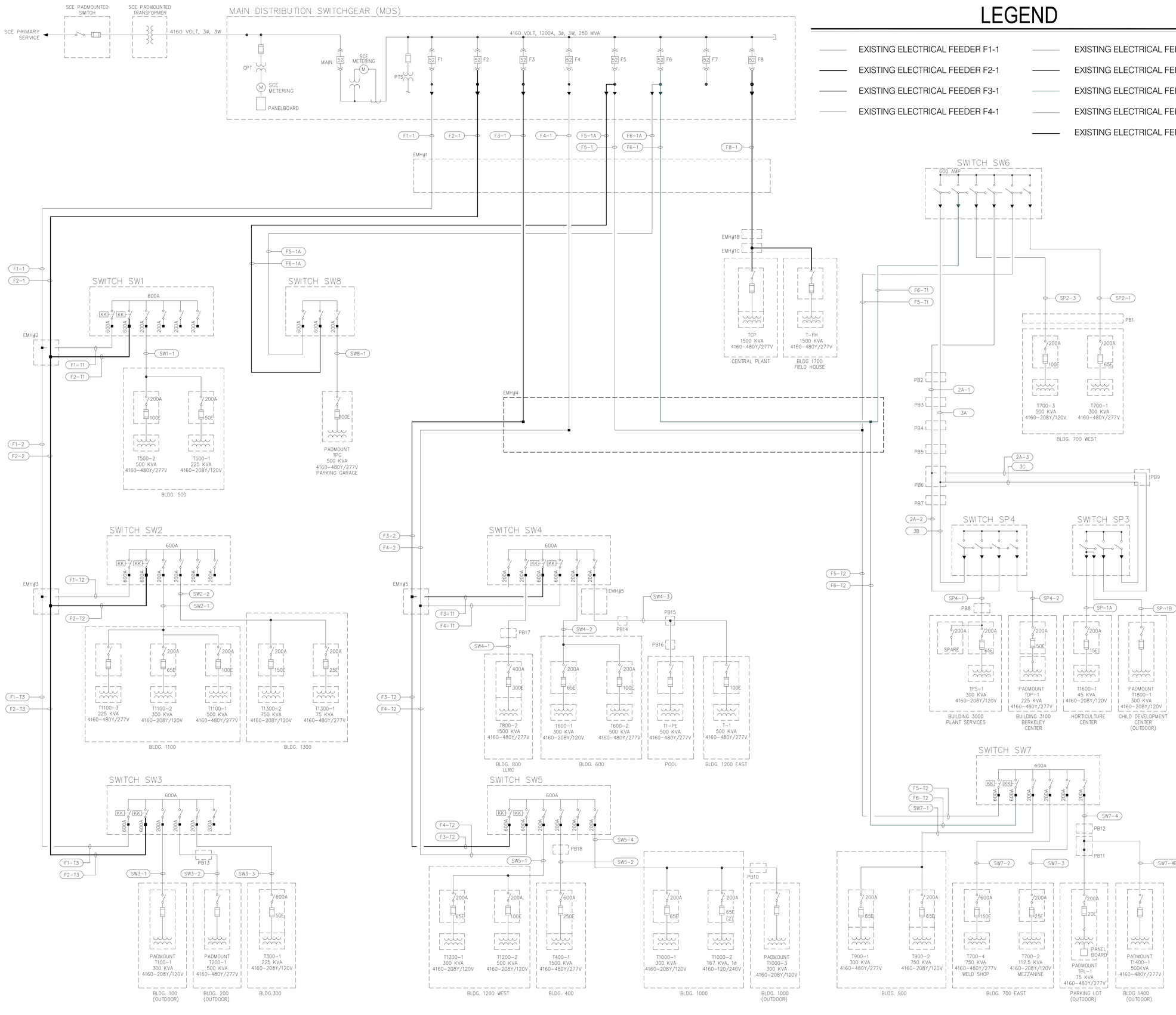

LEGEND

- EXISTING ELECTRICAL FEEDER F1-1
- EXISTING ELECTRICAL FEEDER F2-1
- EXISTING ELECTRICAL FEEDER F3-1
- EXISTING ELECTRICAL FEEDER F4-1
- EXISTING ELECTRICAL FEEDER F5-1
- EXISTING ELECTRICAL FEEDER F5-1A
- EXISTING ELECTRICAL FEEDER F6-1
- EXISTING ELECTRICAL FEEDER F6-1A
- EXISTING ELECTRICAL FEEDER F8-1

P S O M A S
555 South Flower Street, Suite 4300
Los Angeles, CA 90071
Tel. (213) 223-1400
Fax (213) 223-1444

Consultant

P2S Engineering, Inc.
5000 East Spring Street, 8th Floor
Long Beach, CA 90815-5218
T 562.497.2999 F 562.497.2990
www.p2seng.com

Project Title

SITE UTILITY

Owner

FULLERTON COLLEGE

321 E CHAPMAN AVENUE
FULLERTON, CA. 92832-2095

Revisions

Number	Description	Date

Designed
Drawn
Checked
Approved

Date 07/27/2017

Submittal

Scale No Scale

Sheet Title

Single Line Diagram

Sheet Number

E105

P2S No. 8723

FILE PATH & NAME: C:\USERS\GARMAS\DESKTOP\8723_E105-STANDARD\8723_E105.DWG GUILLERMO ARMAS
PLOT: Thursday, July 27, 2017 2:39:06 PM

CONDUIT AND FEEDER SCHEDULE

FEEDER	VOLTAGE	CONDUIT	5kV CONDUCTORS	FROM	TO	REMARKS
F1-1	4160V	(1) 5"	3#500 KCMIL & 1#4/0 GND	MAIN 5kV SWITCHGEAR "MDS"	EMH #2	
F1-2	4160V	(1) 5"	3#500 KCMIL & 1#4/0 GND	EMH #2	EMH #3	
F1-T1	4160V	(1) 5"	3#500 KCMIL & 1#4/0 GND	EMH #2	SWITCH SW1	
F1-T2	4160V	(1) 5"	3#500 KCMIL & 1#4/0 GND	EMH #3	SWITCH SW2	
F1-T3	4160V	(1) 5"	3#500 KCMIL & 1#4/0 GND	EMH #3	SWITCH SW3	
F2-1	4160V	(1) 5"	3#500 KCMIL & 1#4/0 GND	MAIN 5kV SWITCHGEAR "MDS"	EMH #2	
F2-2	4160V	(1) 5"	3#500 KCMIL & 1#4/0 GND	EMH #2	EMH #3	
F2-T1	4160V	(1) 5"	3#500 KCMIL & 1#4/0 GND	EMH #2	SWITCH SW1	
F2-T2	4160V	(1) 5"	3#500 KCMIL & 1#4/0 GND	EMH #3	SWITCH SW2	
F2-T3	4160V	(1) 5"	3#500 KCMIL & 1#4/0 GND	EMH #3	SWITCH SW3	
F3-1	4160V	(1) 5"	3#500 KCMIL & 1#4/0 GND	MAIN 5kV SWITCHGEAR "MDS"	EMH #4	
F3-2	4160V	(1) 5"	3#500 KCMIL & 1#4/0 GND	EMH #4	EMH #5	
F3-T1	4160V	(1) 5"	3#500 KCMIL & 1#4/0 GND	EMH #5	SWITCH SW4	
F3-T2	4160V	(1) 5"	3#500 KCMIL & 1#4/0 GND	EMH #5	SWITCH SW5	
F4-1	4160V	(1) 5"	3#500 KCMIL & 1#4/0 GND	MAIN 5kV SWITCHGEAR "MDS"	EMH #4	
F4-2	4160V	(1) 5"	3#500 KCMIL & 1#4/0 GND	EMH #4	EMH #5	
F4-T1	4160V	(1) 5"	3#500 KCMIL & 1#4/0 GND	EMH #5	SWITCH SW4	
F4-T2	4160V	(1) 5"	3#500 KCMIL & 1#4/0 GND	EMH #5	SWITCH SW5	
F5-1	4160V	(1) 5"	3#500 KCMIL & 1#4/0 GND	MAIN 5kV SWITCHGEAR "MDS"	EMH #4	
F5-1A	4160V	(1) 4"	3#2/0 & 1#2/0 GND	MAIN 5kV SWITCHGEAR "MDS"	PARKING GARAGE	
F5-T1	4160V	(1) 5"	3#500 KCMIL & 1#4/0 GND	EMH #4	SWITCH SW6	
F5-T2	4160V	(1) 5"	3#500 KCMIL & 1#4/0 GND	EMH #4	SWITCH SW7	
F6-1	4160V	(1) 5"	3#500 KCMIL & 1#4/0 GND	MAIN 5kV SWITCHGEAR "MDS"	EMH #4	
F6-1A	4160V	(1) 4"	3#2/0 & 1#2/0 GND	MAIN 5kV SWITCHGEAR "MDS"	PARKING GARAGE	
F6-T1	4160V	(1) 5"	3#500 KCMIL & 1#4/0 GND	EMH #4	SWITCH SW6	
F6-T2	4160V	(1) 5"	3#500 KCMIL & 1#4/0 GND	EMH #4	SWITCH SW7	
F8-1	4160V	(1) 5"	3#500 KCMIL & 1#4/0 GND	MAIN 5kV SWITCHGEAR "MDS"	CENTRAL PLANT	
SP1-B	4160V	(1) 4"	3#2/0 & 1#2/0 GND	HOLTICULTURE	T1800-1	
SW1-1	4160V	(1) 4"	3#2/0 & 1#2/0 GND	SWITCH SW1	BUILDING 500	
SW2-1	4160V	(1) 4"	3#2/0 & 1#2/0 GND	SWITCH SW2	BUILDING 1100	
SW2-2	4160V	(1) 4"	3#2/0 & 1#2/0 GND	SWITCH SW2	BUILDING 1300	
SW3-1	4160V	(1) 4"	3#2/0 & 1#2/0 GND	SWITCH SW3	BUILDING 100	
SW3-2	4160V	(1) 4"	3#2/0 & 1#2/0 GND	SWITCH SW3	BUILDING 200	
SW3-3	4160V	(1) 4"	3#2/0 & 1#2/0 GND	SWITCH SW3	BUILDING 300	
SW4-1	4160V	(1) 4"	3#2/0 & 1#2/0 GND	SWITCH SW4	BUILDING 800	
SW4-2	4160V	(1) 4"	3#2/0 & 1#2/0 GND	SWITCH SW4	BUILDING 600	
SW4-3	4160V	(1) 4"	3#1/0 & 1#2 GND	SWITCH SW4	BUILDING 1200 EAST AND POOL	
SW5-1	4160V	(1) 4"	3#2/0 & 1#2/0 GND	SWITCH SW5	BUILDING 1200	
SW5-2	4160V	(1) 4"	3#2/0 & 1#2/0 GND	SWITCH SW5	BUILDING 400	
SW5-3	4160V	(1) 4"	3#2/0 & 1#2/0 GND	SWITCH SW5	BUILDING 400	
SW5-4	4160V	(1) 4"	3#2/0 & 1#2/0 GND	SWITCH SW5	BUILDING 1000	
SW7-1	4160V	(1) 4"	3#2/0 & 1#2/0 GND	SWITCH SW7	BUILDING 900	
SW7-2	4160V	(1) 4"	3#2/0 & 1#2/0 GND	SWITCH SW7	BUILDING 700 EAST	
SW7-3	4160V	(1) 4"	3#2/0 & 1#2/0 GND	SWITCH SW7	BUILDING 700 EAST	
SW7-4	4160V	(1) 4"	3#2/0 & 1#2/0 GND	SWITCH SW7	PARKING LOT SUB	
SW7-4A	4160V	(1) 4"	3#2/0 & 1#2/0 GND	PB11	ATHLETIC FIELD SUB	
SW7-4B	4160V	(1) 4"	3#2/0 & 1#2/0 GND	PB11	BUILDING 1400	
SW8-1	4160V	(1) 4"	3#2/0 & 1#2/0 GND	SW8	PARKING GARAGE	
SP-1		(2) 5" SPARE				
SP-2		(4) 5" SPARE				SPARE CONDUITS WITH PULLROPE
SP-3		(1) 4" SPARE				SPARE CONDUITS WITH PULLROPE
SP-4		(2) 4" SPARE				SPARE CONDUITS WITH PULLROPE
SP-5		(1) 5" SPARE				SPARE CONDUITS WITH PULLROPE

P S O M A S

555 South Flower Street, Suite 4300
Los Angeles, CA 90071
Tel. (213) 223-1400
Fax (213) 223-1444

Consultant

P2S Engineering, Inc.

5000 East Spring Street, 8th Floor
Long Beach, CA 90815-5218
T 562.497.2999 F 562.497.2990

www.p2seng.com

Project Title

SITE UTILITY

Owner

FULLERTON COLLEGE

321 E CHAPMAN AVENUE
FULLERTON, CA. 92832-2095

Revisions

Number	Description	Date

Designed
Drawn
Checked
Approved

Date 07/27/2017

Submittal

Scale No Scale

Sheet Title

Conduit And Feeder Schedule

Sheet Number

E106

P2S No. 8723

FILE PATH & NAME: C:\USERS\GARAN\DESKTOP\JB723_E100 - STANDARDS\JB723_E106.DWG GUILLERMO ARANS
PLOT: Thursday, July 27, 2017 2:39:02 PM

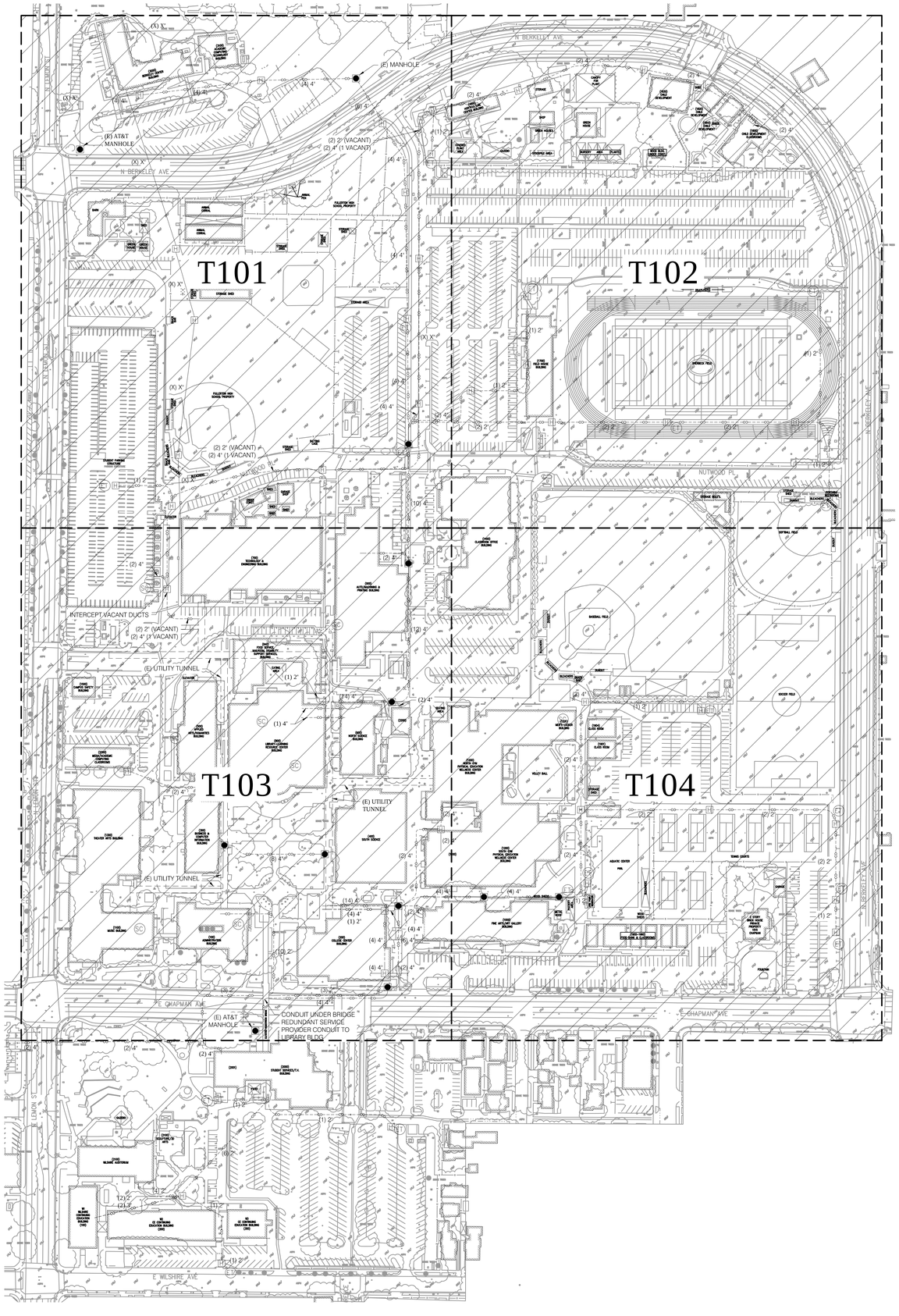

LEGEND

(2) 4"	(DUCT QTY) DUCT SIZE
●	EXISTING MANHOLE
H	EXISTING PULLBOX
— — — CO — — —	EXISTING CONDUIT

SCALE: 1" = 100'
0 100

P S O M A S
555 South Flower Street, Suite 4300
Los Angeles, CA 90071
Tel. (213) 223-1400
Fax (213) 223-1444

Consultant

P2S Engineering, Inc.
5000 East Spring Street, 8th Floor
Long Beach, CA 90815-5218
T 562.497.2999 F 562.497.2990
www.p2seng.com

Project Title

SITE UTILITY

Owner

FULLERTON COLLEGE

321 E CHAPMAN AVENUE
FULLERTON, CA. 92832-2095

Revisions

Number	Description	Date

Designed
Drawn
Checked
Approved

Date 07/27/2017

Submittal

Scale 1"=100'

Sheet Title

Overall Site
Telecom Plan

Sheet Number

T100

P2S No. 8723

FILE PATH & NAME: R:\8723\TELECOM\8723_T100.DWG SAMUEL SALAZAR
PLOT: Thursday, June 8, 2017 8:02:51 AM

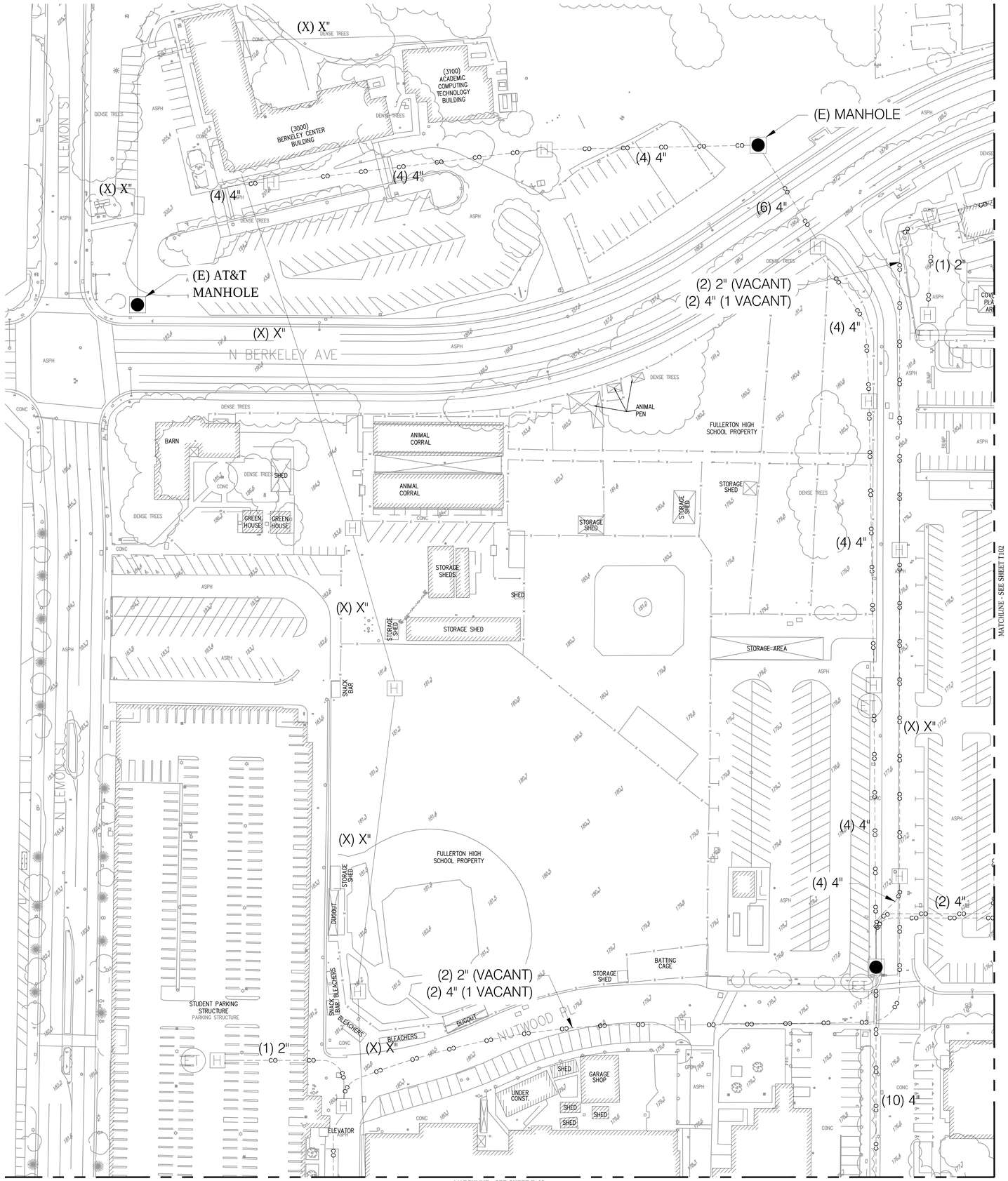

LEGEND

(2) 4"	(DUCT QTY) DUCT SIZE
●	EXISTING MANHOLE
H	EXISTING PULLBOX
— — CO — —	EXISTING CONDUIT

SCALE: 1" = 40'
0 40

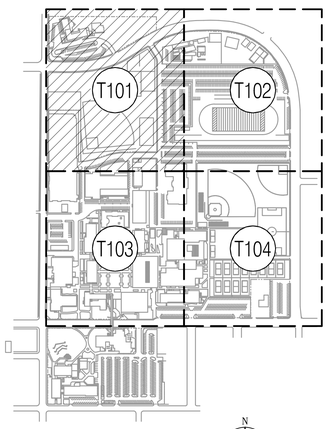

KEY MAP

P S O M A S
555 South Flower Street, Suite 4300
Los Angeles, CA 90071
Tel. (213) 223-1400
Fax (213) 223-1444

Consultant

P2S Engineering, Inc.
5000 East Spring Street, 8th Floor
Long Beach, CA 90815-5218
T 562.497.2999 F 562.497.2990
www.p2seng.com

Project Title

SITE UTILITY

Owner

FULLERTON COLLEGE

321 E CHAPMAN AVENUE
FULLERTON, CA. 92832-2095

Revisions

Number	Description	Date

Designed
Drawn
Checked
Approved

Date 07/27/2017

Submittal

Scale 1"=40'

Sheet Title

Enlarged Site Telecom Plan

Sheet Number

T101

P2S No. 8723

FILE PATH & NAME: R:\8723\TELECOM\8723_T101.DWG SAMUEL SALAZAR
PLOT: Thursday, June 8, 2017 8:02:58 AM

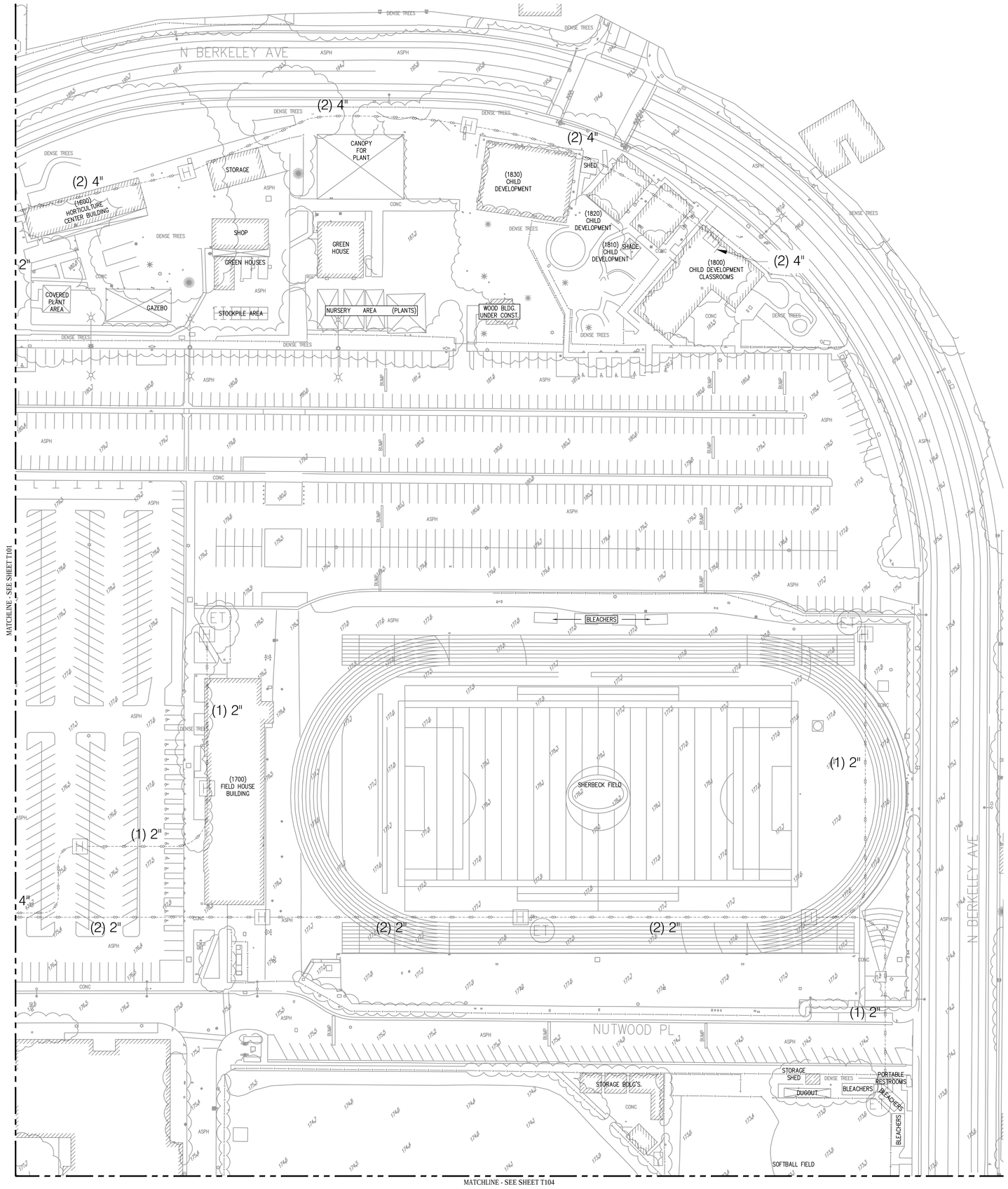

LEGEND

(2) 4"	(DUCT QTY) DUCT SIZE
●	EXISTING MANHOLE
H	EXISTING PULLBOX
— — — CO — — —	EXISTING CONDUIT

SCALE: 1" = 40'
0 40

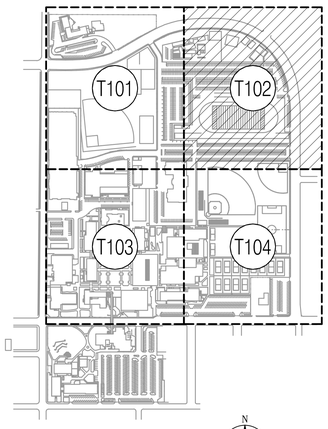

KEY MAP

P S O M A S
555 South Flower Street, Suite 4300
Los Angeles, CA 90071
Tel. (213) 223-1400
Fax (213) 223-1444

Consultant

P2S Engineering, Inc.
5000 East Spring Street, 8th Floor
Long Beach, CA 90815-5218
T 562.497.2999 F 562.497.2990
www.p2seng.com

Project Title

SITE UTILITY

Owner

FULLERTON COLLEGE

321 E CHAPMAN AVENUE
FULLERTON, CA. 92832-2095

Revisions

Number	Description	Date

Designed
Drawn
Checked
Approved

Date 07/27/2017

Submittal

Scale 1"=40'

Sheet Title

Enlarged Site Telecom Plan

Sheet Number

T102

P2S No. 8723

FILE PATH & NAME: R:\8723\TELECOM\8723_T102.DWG SAMUEL SALAZAR
PLOT: Thursday, June 8, 2017 8:03:08 AM

MATCHLINE - SEE SHEET T101

(700)
TECHNOLOGY &
ENGINEERING BUILDING

(900)
AUTO/MACHINING &
PRINTING BUILDING

(840)
FOOD SERVICE,
MAILROOM, DISABILITY
SUPPORT SERVICES,
BUILDING

EATING
AREA

(1500)
CAMPUS SAFETY
BUILDING

(500)
APPLIED
ARTS/HUMANITIES
BUILDING

(800)
LIBRARY–LEARNING
RESOURCE CENTER
BUILDING

(600)
NORTH SCIENCE
BUILDING

(2200)

SEATING
AREA

(2300)
MEDIA/ACADEMIC
COMPUTING
CLASSROOMS

(1300)
THEATER ARTS BUILDING

(300)
BUSINESS &
COMPUTER
INFORMATION
BUILDING

(400)
SOUTH SCIENCE

(1200)

(1100)
MUSIC BUILDING

(100)
ADMINISTRATION
BUILDING

(200)
COLLEGE CENTER
BUILDING

ELEVATOR

ELEVATED PEDESTRIAN BRIDGE

N LEMON ST

E CHAPMAN AVE

MATCHLINE - SEE SHEET T104

INTERCEPT VACANT DUCTS

(2) 4"

(2) 2" (VACANT)
(2) 4" (1 VACANT)

(E) UTILITY TUNNEL

(1) 2"

(1) 4"

(14) 4"

(2) 4"

(12) 4"

(2) 4"

(2) 4"

(2) 4"

(2) 4"

(2) 4"

(8) 4"

(E) UTILITY TUNNEL

(E) UTILITY TUNNEL

(4) 4"

(14) 4"

(4) 4"
(1) 2"

(2) 4"

(4) 4"

(4) 4"

(6) 4"

(10) 2"

(4) 4"

(2) 4"

(3) 2"

(3) 2"

(4) 4"

(E) AT&T
MANHOLE

CONDUIT UNDER BRIDGE
REDUNDANT SERVICE
PROVIDER CONDUIT TO
LIBRARY BLDG

SCALE: 1" = 40'
0 40

LEGEND

(2) 4"	(DUCT QTY) DUCT SIZE
●	EXISTING MANHOLE
H	EXISTING PULLBOX
— — CO — —	EXISTING CONDUIT

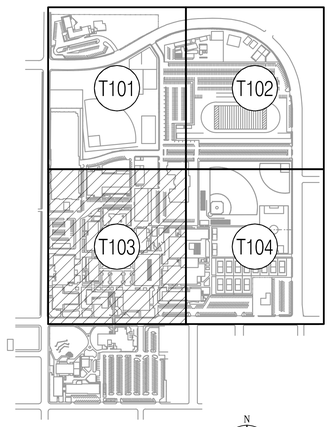

KEY MAP

PSOMAS
555 South Flower Street, Suite 4300
Los Angeles, CA 90071
Tel. (213) 223-1400
Fax (213) 223-1444

Consultant

p2s

P2S Engineering, Inc.

5000 East Spring Street, 8th Floor
Long Beach, CA 90815-5218
T 562.497.2999 F 562.497.2990

www.p2seng.com

Project Title

SITE UTILITY

Owner

FULLERTON COLLEGE

321 E CHAPMAN AVENUE
FULLERTON, CA. 92832-2095

Revisions

Number	Description	Date

Designed
Drawn
Checked
Approved

Date 07/27/2017

Submittal

Scale 1"=40'

Sheet Title

Enlarged Site
Telecom Plan

Sheet Number

T103

P2S No. 8723

FILE PATH & NAME: R:\8723\TELECOM\8723_T103.DWG SAMUEL SALAZAR
PLOT: Thursday, June 8, 2017 8:03:16 AM

MATCHLINE - SEE SHEET T102

MATCHLINE - SEE SHEET T103

(1400) CLASSROOM OFFICE BUILDING

BASEBALL FIELD

SOFTBALL FIELD

DUGOUT

BLEACHERS

SNACK BAR

SOCCER FIELD

(1231) MEN'S LOCKER BUILDING

(1904) CLASS ROOM

(1901) CLASS ROOM

(1200) NORTH GYM PHYSICAL EDUCATION WELLNESS CENTER BUILDING

VOLLEY BALL

STORAGE SHED

(1200) SOUTH GYM PHYSICAL EDUCATION WELLNESS CENTER BUILDING

AQUATIC CENTER

POOL

TENNIS COURTS

GARAGE

WOOD SHEDS

POTTERY AREA

FIRE PUMP GENERATOR

METAL ROOF

(1000) FINE ARTS/ART GALLERY BUILDING

(1955–1960) FOOD BANK & CLASSROOMS

2 STORY BRICK HOUSE PRIVATE PROPERTY 1515 CHAPMAN

FOUNTAIN

DENSE TREES

ASPH

CONC

SAND

(2) 4"

(1) 2"

(4) 4"

(2) 2"

E CHAPMAN AVE

N BERKELEY AVE

SCALE: 1" = 40'

0 40

LEGEND

(2) 4"	(DUCT QTY) DUCT SIZE
●	EXISTING MANHOLE
H	EXISTING PULLBOX
— — — CO — — —	EXISTING CONDUIT

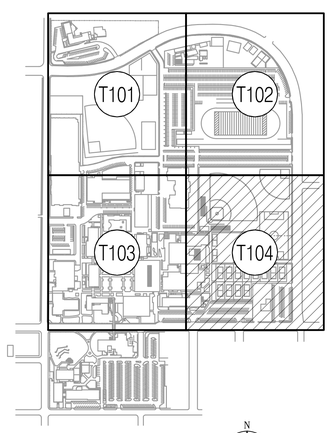

KEY MAP

N

P S O M A S

555 South Flower Street, Suite 4300
Los Angeles, CA 90071
Tel. (213) 223-1400
Fax (213) 223-1444

Consultant

p2s

P2S Engineering, Inc.

5000 East Spring Street, 8th Floor
Long Beach, CA 90815-5218
T 562.497.2999 F 562.497.2990

www.p2seng.com

Project Title

SITE UTILITY

Owner

FULLERTON COLLEGE

321 E CHAPMAN AVENUE
FULLERTON, CA. 92832-2095

Revisions

Number	Description	Date

Designed
Drawn
Checked
Approved

Date 07/27/2017

Submittal

Scale 1"=40'

Sheet Title

Enlarged Site Telecom Plan

Sheet Number

T104

P2S No. 8723

FILE PATH & NAME: R:\8723\TELECOM\8723_T104.DWG SAMUEL SALAZAR
PLOT: Thursday, June 8, 2017 8:03:25 AM

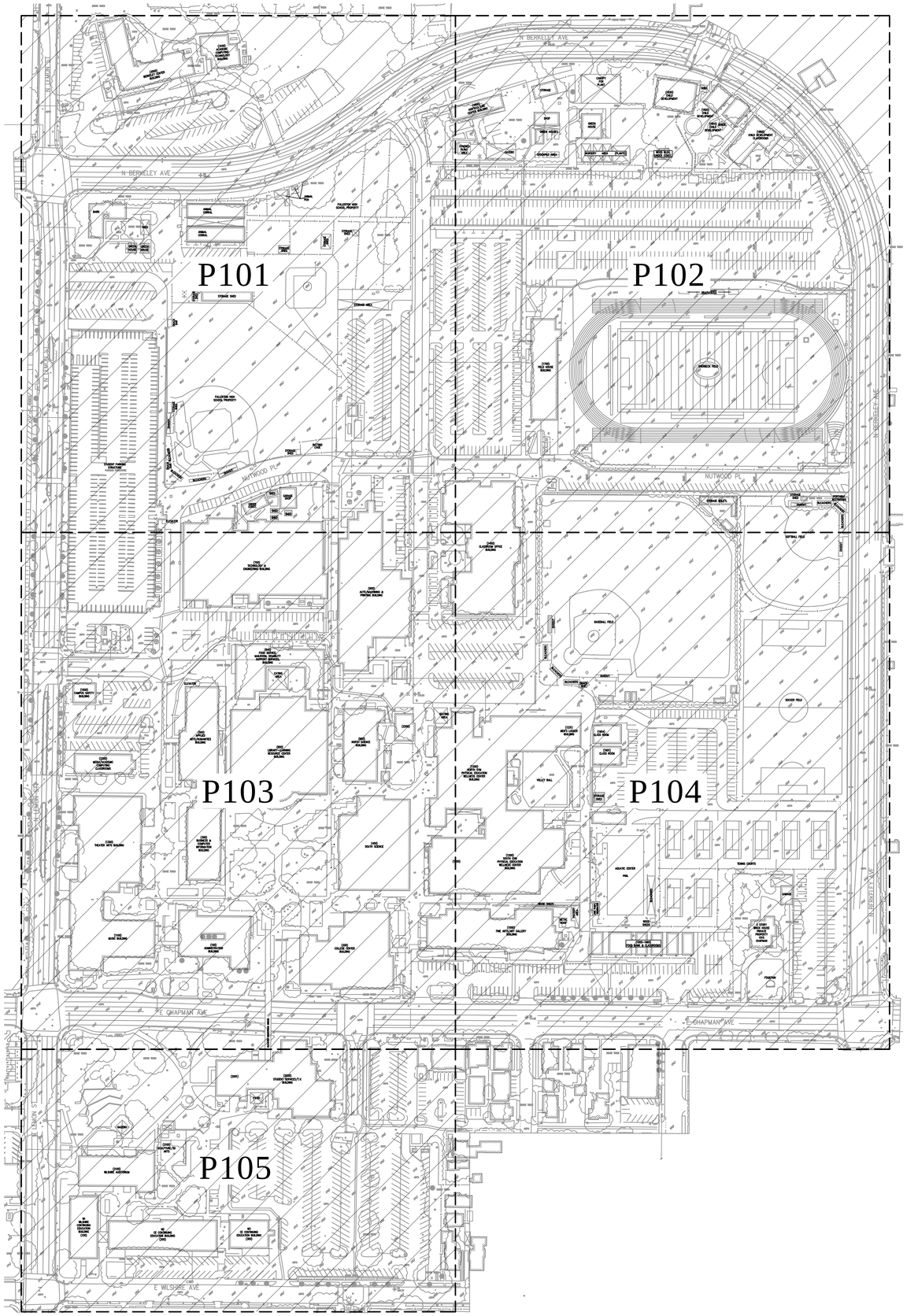

SCALE: 1" = 100'
0 100

P S O M A S

555 South Flower Street, Suite 4300
Los Angeles, CA 90071
Tel. (213) 223-1400
Fax (213) 223-1444

Consultant

P2S Engineering, Inc.

5000 East Spring Street, 8th Floor
Long Beach, CA 90815-5218
T 562.497.2999 F 562.497.2990

www.p2seng.com

Project Title

SITE UTILITY

Owner

FULLERTON COLLEGE

321 E CHAPMAN AVENUE
FULLERTON, CA. 92832-2095

Revisions

Number	Description	Date

Designed
Drawn
Checked
Approved

Date 07/27/2017

Submittal

Scale 1"=100'

Sheet Title

Overall Site
Gas Plan

Sheet Number

P100

P2S No. 8723

FILE PATH & NAME: R:\8723\PLUMBING\J8723_P100.DWG (JAMES VALIENS)
PLOT: Thursday, July 20, 2017 5:16:10 PM

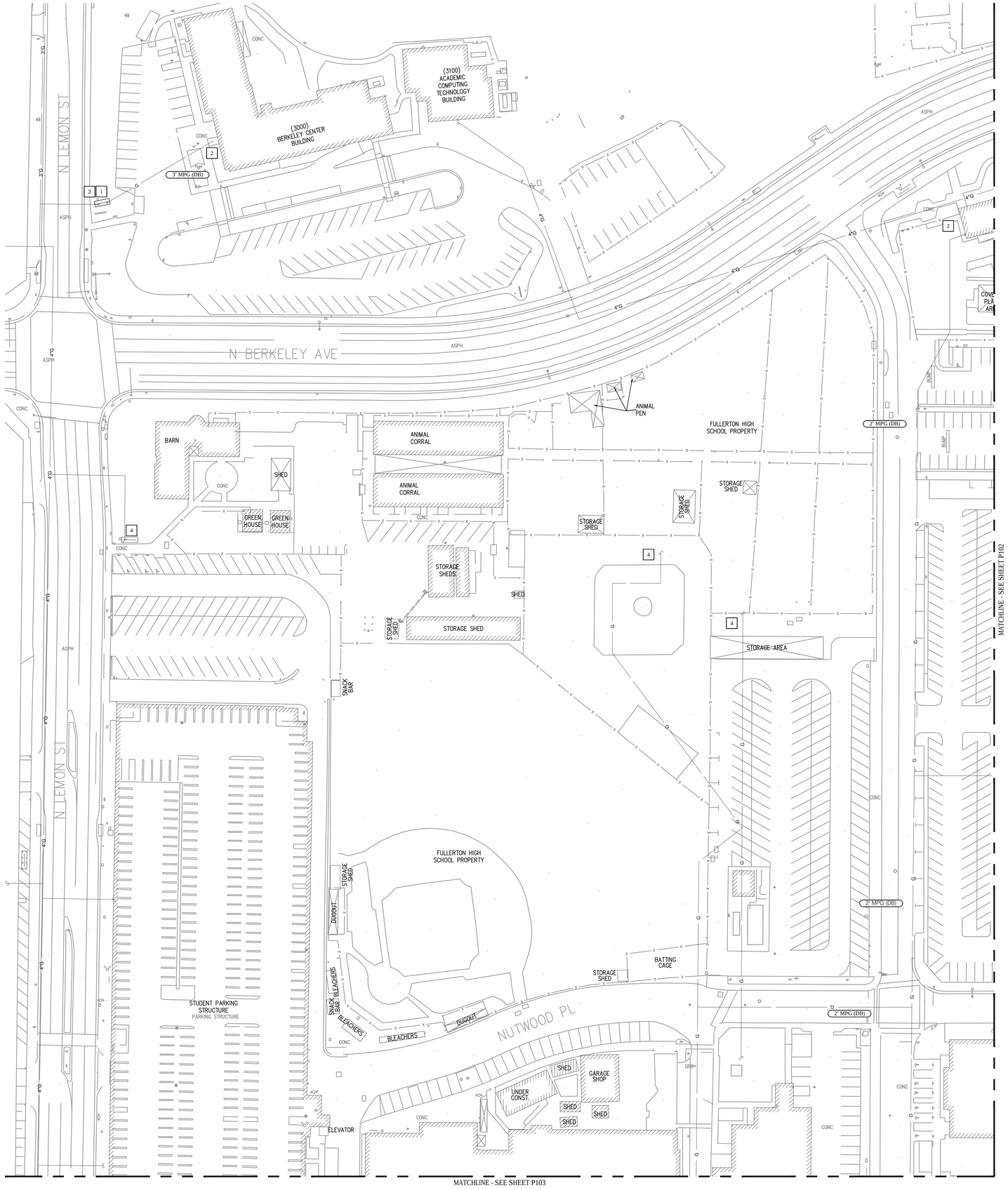

NOTES

1. GAS COMPANY'S GAS METER AND PRESSURE REDUCING REGULATOR. GAS CO. METER #14989151
2. POINT OF CONNECTION TO CAMPUS BUILDING FROM MEDIUM PRESSURE GAS.
3. UNDER GROUND GAS REGULATOR AND METER IN VALVE BOX.
4. OUT OF SERVICE GAS LINE.

SCALE: 1" = 40'

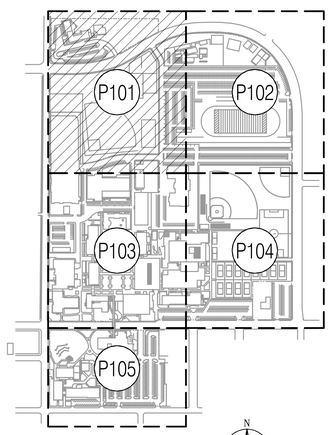

KEY MAP

PSOMAS
555 South Flower Street, Suite 4300
Los Angeles, CA 90071
Tel. (213) 223-1400
Fax (213) 223-1444

Consultant

P2S Engineering, Inc.
5000 East Spring Street, 8th Floor
Long Beach, CA 90815-5218
T 562.497.2999 F 562.497.2990
www.p2seng.com

Project Title

SITE UTILITY

Owner

FULLERTON COLLEGE

321 E CHAPMAN AVENUE
FULLERTON, CA. 92832-2095

Revisions

Number	Description	Date

Designed
Drawn
Checked
Approved

Date 07/27/2017

Submittal

Scale 1"=40'

Sheet Title

Enlarged Site Gas Plan

Sheet Number

P101

P2S No. 8723

FILE PATH & NAME: R:\J8723\PLUMBING\J8723_P101.DWG JAMES VALIENS
PLOT: Thursday, July 20, 2017 5:16:12 PM

R:\J8723\Plumbing\J8723_P101.dwg, 7/20/2017 5:16:11 PM, AutoCAD PDF (General Documentation).pc3

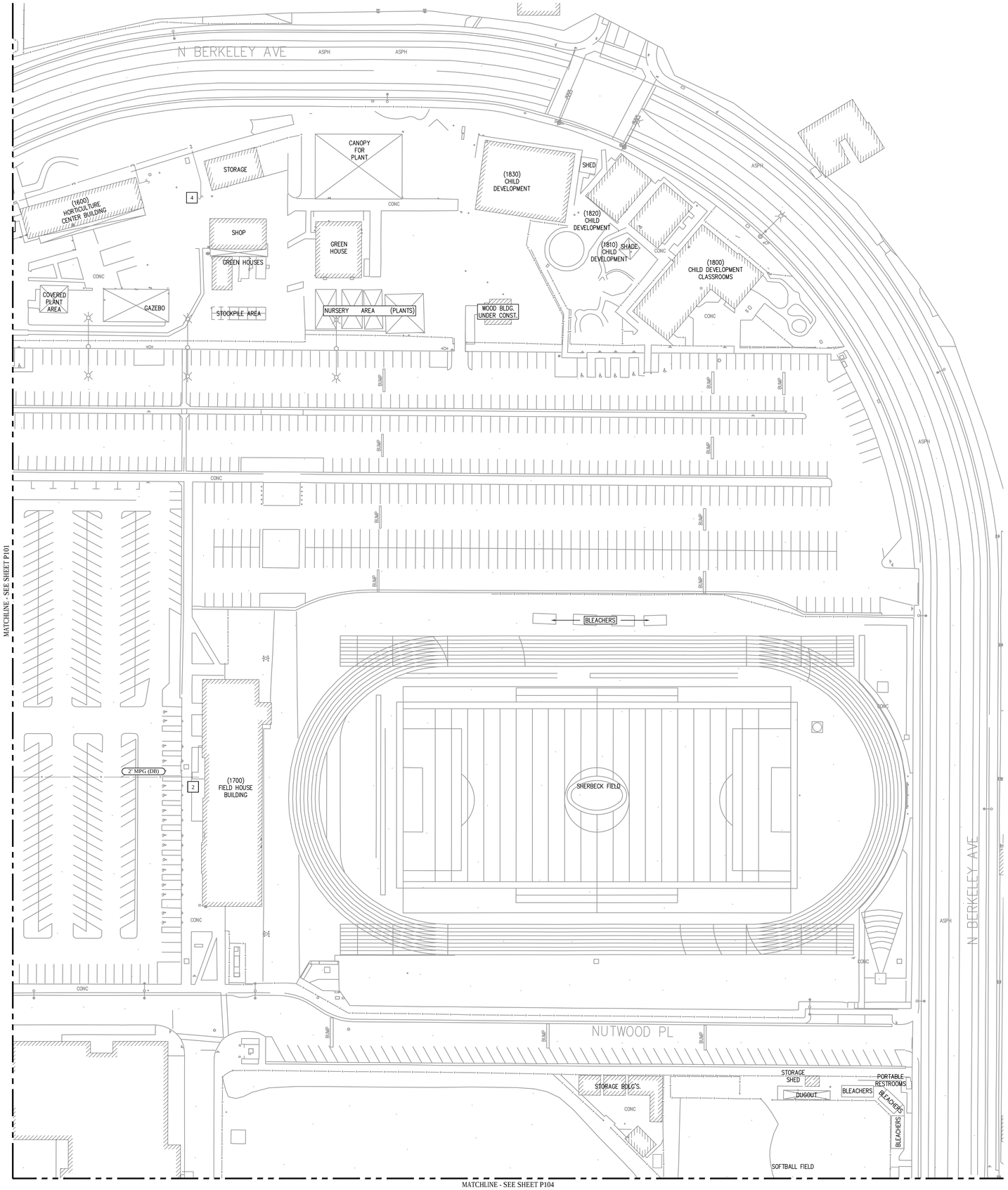

NOTES

1. NOT USED ON THIS SHEET.
2. POINT OF CONNECTION TO CAMPUS BUILDING FROM MEDIUM PRESSURE GAS.
3. NOT USED ON THIS SHEET.
4. OUT OF SERVICE GAS LINE.

SCALE: 1" = 40'

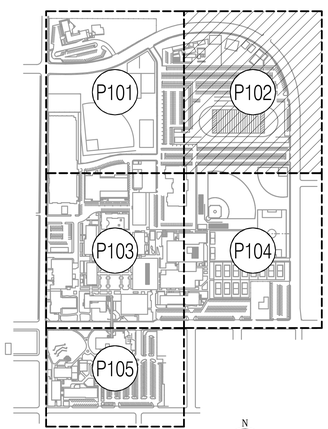

KEY MAP

P S O M A S

555 South Flower Street, Suite 4300
Los Angeles, CA 90071
Tel. (213) 223-1400
Fax (213) 223-1444

Consultant

p2s

P2S Engineering, Inc.

5000 East Spring Street, 8th Floor
Long Beach, CA 90815-5218
T 562.497.2999 F 562.497.2990

www.p2seng.com

Project Title

SITE UTILITY

Owner

FULLERTON COLLEGE

321 E CHAPMAN AVENUE
FULLERTON, CA. 92832-2095

Revisions

Number	Description	Date

Designed
Drawn
Checked
Approved

Date 07/27/2017

Submittal

Scale 1"=40'

Sheet Title

Enlarged Site Gas Plan

Sheet Number

P102

P2S No. 8723

FILE PATH & NAME: R:\J8723\PLUMBING\J8723_P102.DWG (JAMES VALIENS)
PLOT: Thursday, July 20, 2017 5:16:13 PM

R:\J8723\Plumbing\J8723_P102.dwg, 7/20/2017 5:16:12 PM, AutoCAD PDF (General Documentation).pc3

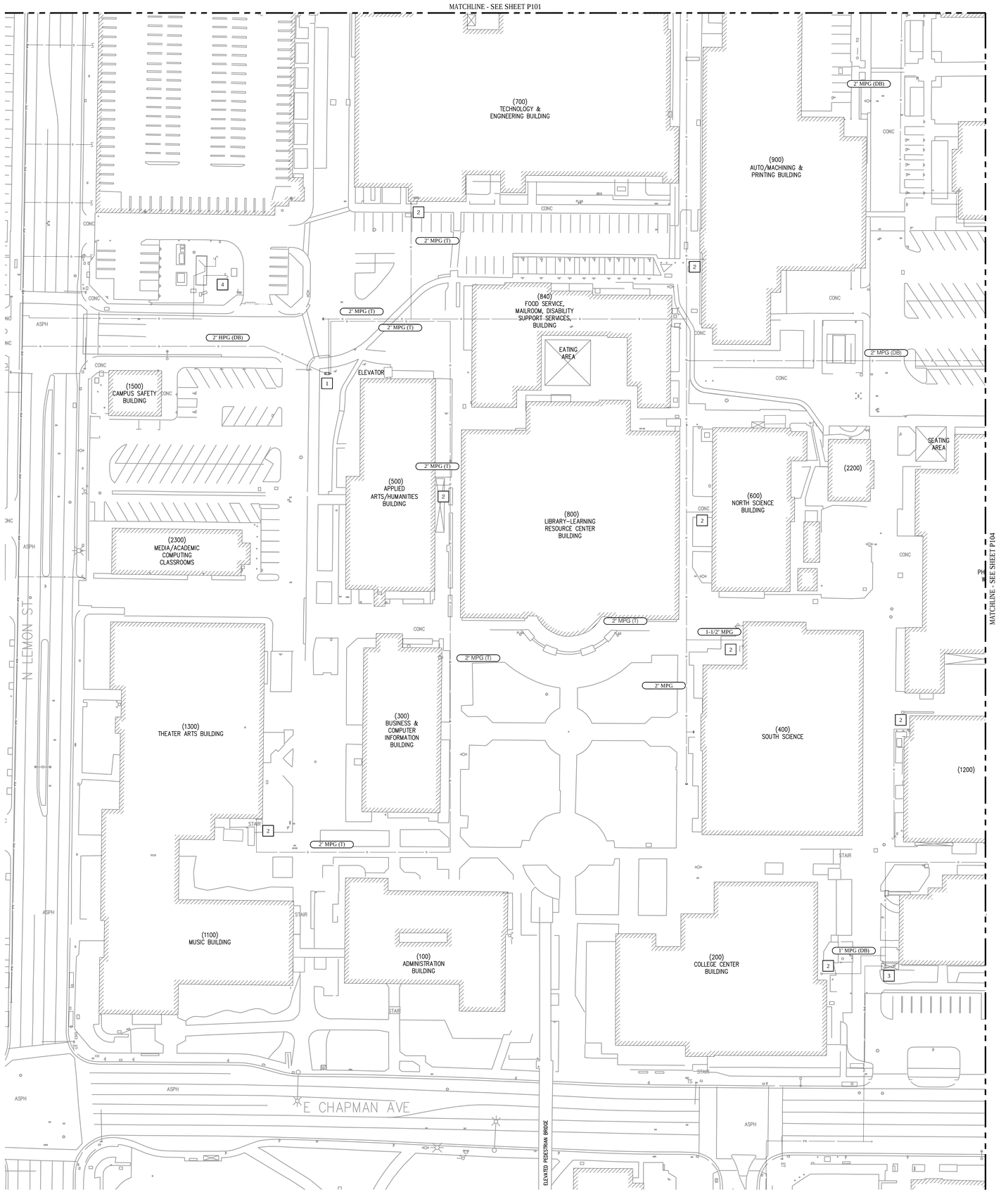

NOTES

1. GAS COMPANY'S GAS METER AND PRESSURE REDUCING REGULATOR. GAS CO. METER #10959431
2. POINT OF CONNECTION TO CAMPUS BUILDING FROM MEDIUM PRESSURE GAS.
3. GAS COMPANY'S GAS METER AND PRESSURE REDUCING REGULATOR. GAS CO. METER #13425656
4. OUT OF SERVICE GAS LINES.

SCALE: 1" = 40'

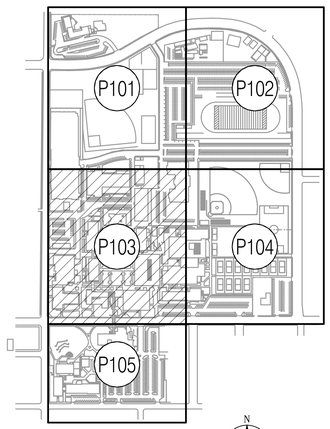

KEY MAP

PSOMAS
555 South Flower Street, Suite 4300
Los Angeles, CA 90071
Tel. (213) 223-1400
Fax (213) 223-1444

Consultant

P2S Engineering, Inc.
5000 East Spring Street, 8th Floor
Long Beach, CA 90815-5218
T 562.497.2999 F 562.497.2990
www.p2seng.com

Project Title

SITE UTILITY

Owner

FULLERTON COLLEGE

321 E CHAPMAN AVENUE
FULLERTON, CA. 92832-2095

Revisions

Number	Description	Date

Designed
Drawn
Checked
Approved

Date 07/27/2017

Submittal

Scale 1"=40'

Sheet Title

Enlarged Site
Gas Plan

Sheet Number

P103

P2S No. 8723

FILE PATH & NAME: R:\J8723\PLUMBING\J8723_P103.DWG (JAMES VALIENS)
PLOT: Thursday, July 20, 2017 5:16:15 PM

R:\J8723\Plumbing\J8723_P103.dwg, 7/20/2017 5:16:14 PM, AutoCAD PDF (General Documentation).pc3

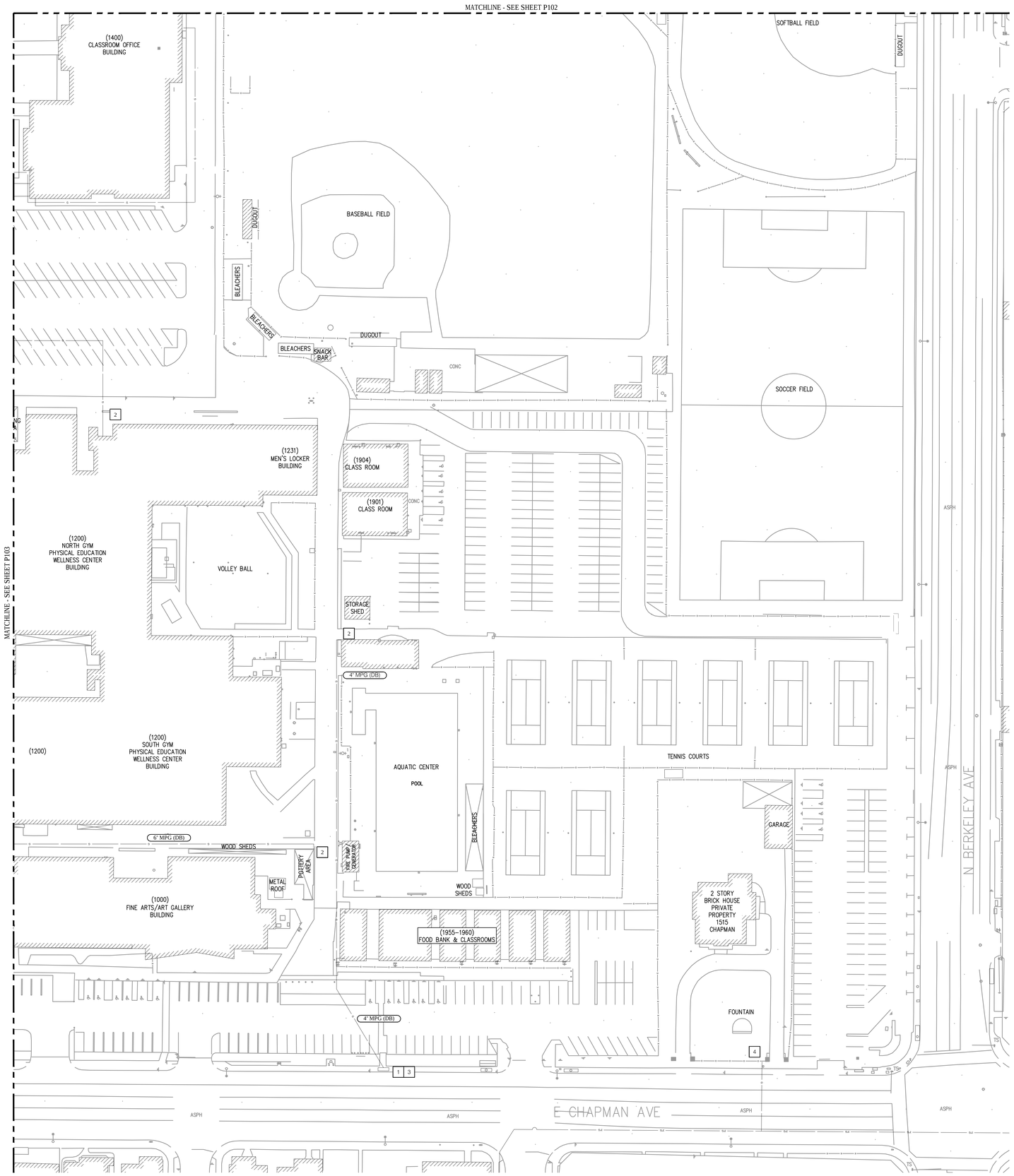

NOTES

1. GAS COMPANY'S GAS METER AND PRESSURE REDUCING REGULATOR. GAS CO. METER #10575759
2. POINT OF CONNECTION TO CAMPUS BUILDING FROM MEDIUM PRESSURE GAS.
3. UNDER GROUND GAS REGULATOR AND METER IN VALVE BOX.
4. OUT OF SERVICE GAS LINE.

SCALE: 1" = 40'
0 40

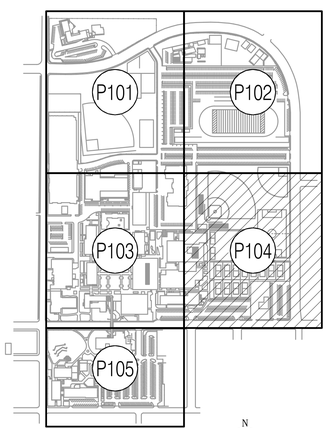

KEY MAP

P S O M A S

555 South Flower Street, Suite 4300
Los Angeles, CA 90071
Tel. (213) 223-1400
Fax (213) 223-1444

Consultant

P2S Engineering, Inc.

5000 East Spring Street, 8th Floor
Long Beach, CA 90815-5218
T 562.497.2999 F 562.497.2990

www.p2seng.com

Project Title

SITE UTILITY

Owner

FULLERTON COLLEGE

321 E CHAPMAN AVENUE
FULLERTON, CA. 92832-2095

Revisions

Number	Description	Date

Designed
Drawn
Checked
Approved

Date 07/27/2017

Submittal

Scale 1"=40'

Sheet Title

Enlarged Site
Gas Plan

Sheet Number

P104

P2S No. 8723

FILE PATH & NAME: R:\J8723\PLUMBING\J8723_P104.DWG JAMES VALENSI
PLOT: Thursday, July 20, 2017 5:16:16 PM

R:\J8723\Plumbing\J8723_P104.dwg, 7/20/2017 5:16:16 PM, AutoCAD PDF (General Documentation).pc3

NOTES

1. GAS COMPANY'S GAS METER AND PRESSURE REDUCING REGULATOR.
2. POINT OF CONNECTION TO CAMPUS BUILDING FROM MEDIUM PRESSURE GAS.
3. ABOVE GROUND GAS REGULATOR AND METER IN VALVE BOX.
4. OUT OF SERVICE GAS LINE.

MATCHLINE - SEE SHEET P103

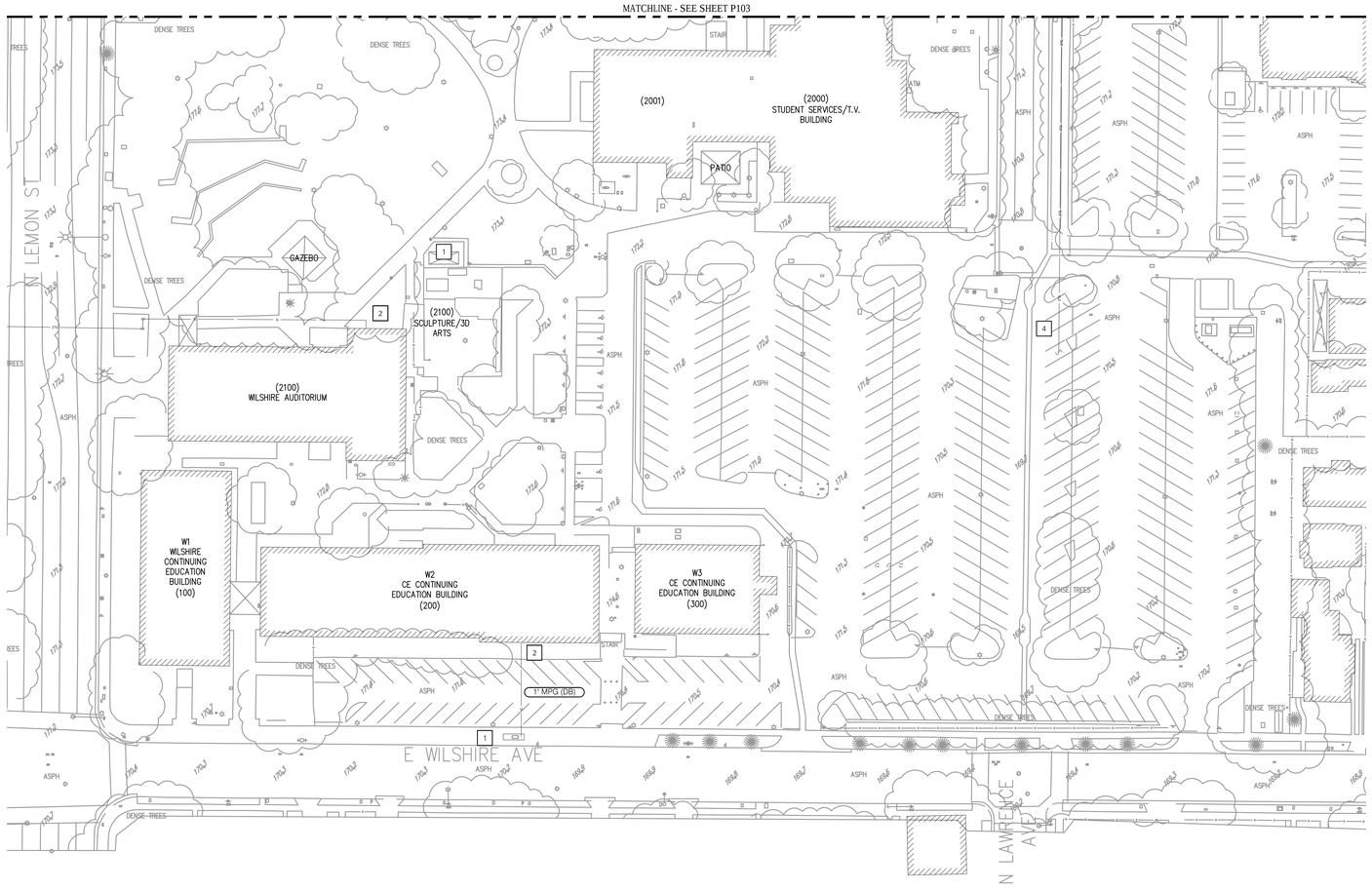

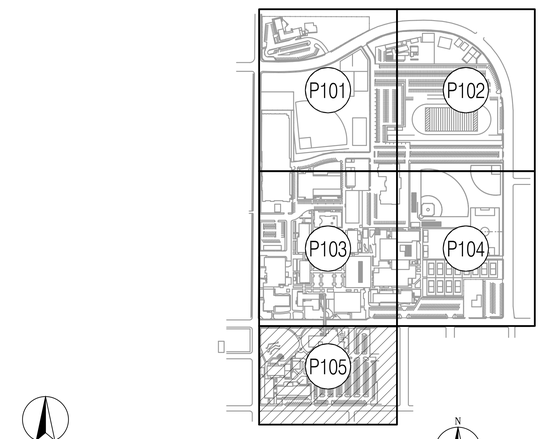

KEY MAP

SCALE: 1" = 40'

P S O M A S

555 South Flower Street, Suite 4300
Los Angeles, CA 90071
Tel. (213) 223-1400
Fax (213) 223-1444

Consultant

P2S Engineering, Inc.

5000 East Spring Street, 8th Floor
Long Beach, CA 90815-5218
T 562.497.2999 F 562.497.2990

www.p2seng.com

Project Title

SITE UTILITY

Owner

FULLERTON COLLEGE

321 E CHAPMAN AVENUE
FULLERTON, CA. 92832-2095

Revisions

Number	Description	Date

Designed
Drawn
Checked
Approved

Date 07/27/2017

Submittal

Scale 1"=40'

Sheet Title

Enlarged Site
Gas Plan

Sheet Number

P105

P2S No. 8723

FILE PATH & NAME: R:\J8723\PLUMBING\J8723_P105.DWG JAMES VALERIO
PLOT: Thursday, July 20, 2017 5:16:18 PM

R:\J8723\Plumbing\J8723_P105.dwg, 7/20/2017 5:16:17 PM, AutoCAD PDF (General Documentation).pc3

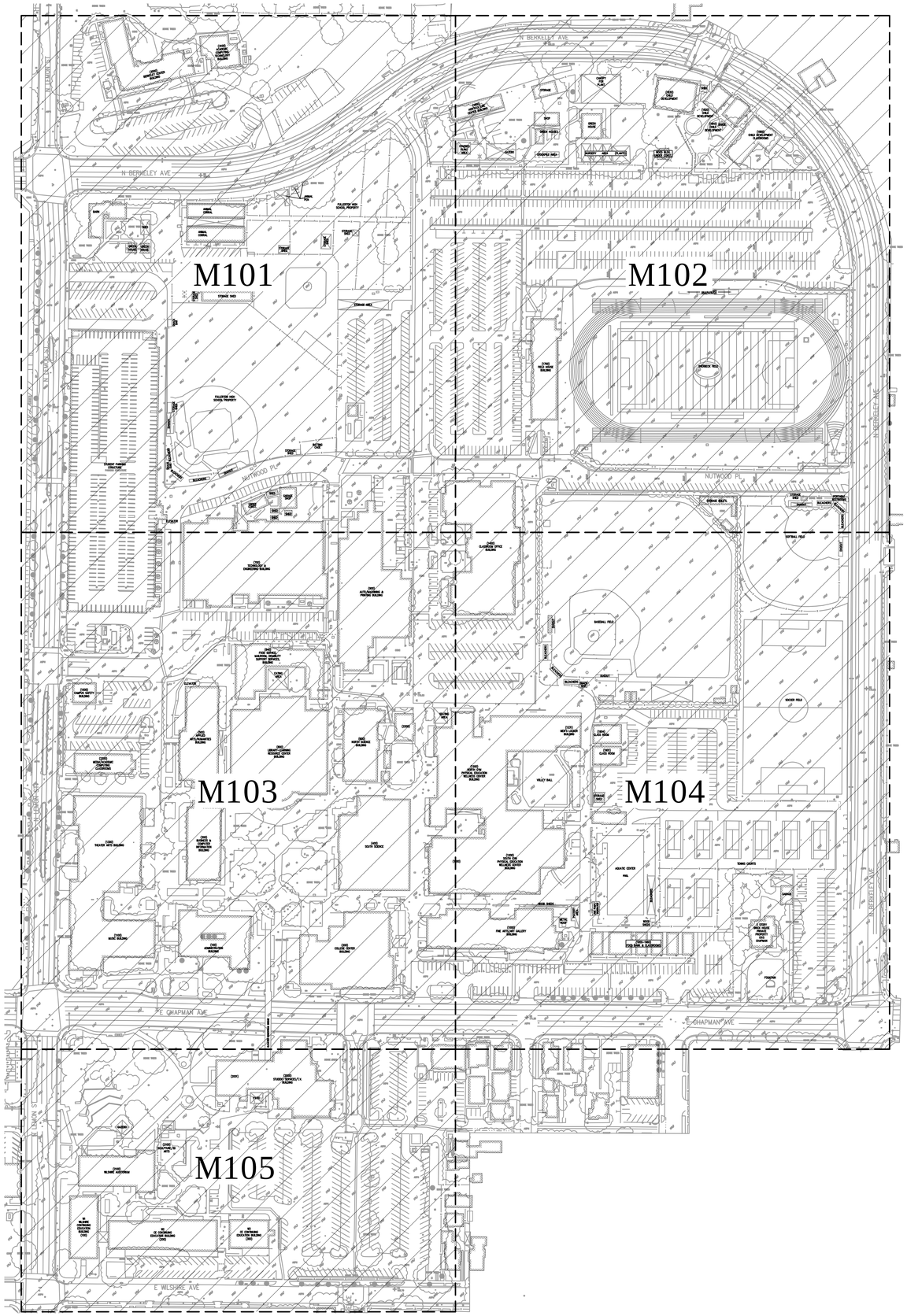

SCALE: 1" = 100'
0 100

P S O M A S

555 South Flower Street, Suite 4300
Los Angeles, CA 90071
Tel. (213) 223-1400
Fax (213) 223-1444

Consultant

P2S Engineering, Inc.

5000 East Spring Street, 8th Floor
Long Beach, CA 90815-5218
T 562.497.2999 F 562.497.2990

www.p2seng.com

Project Title

SITE UTILITY

Owner

FULLERTON COLLEGE

321 E CHAPMAN AVENUE
FULLERTON, CA. 92832-2095

Revisions

Number	Description	Date

Designed
Drawn
Checked
Approved

Date 07/27/2017

Submittal

Scale 1"=100'

Sheet Title

Overall Site
Mechanical Plan

Sheet Number

M100

P2S No. 8723

FILE PATH & NAME: R:\J8723\MECHANICAL\J8723_M100.DWG JAMES VALIENSI
PLOT: Thursday, July 20, 2017 5:08:15 PM

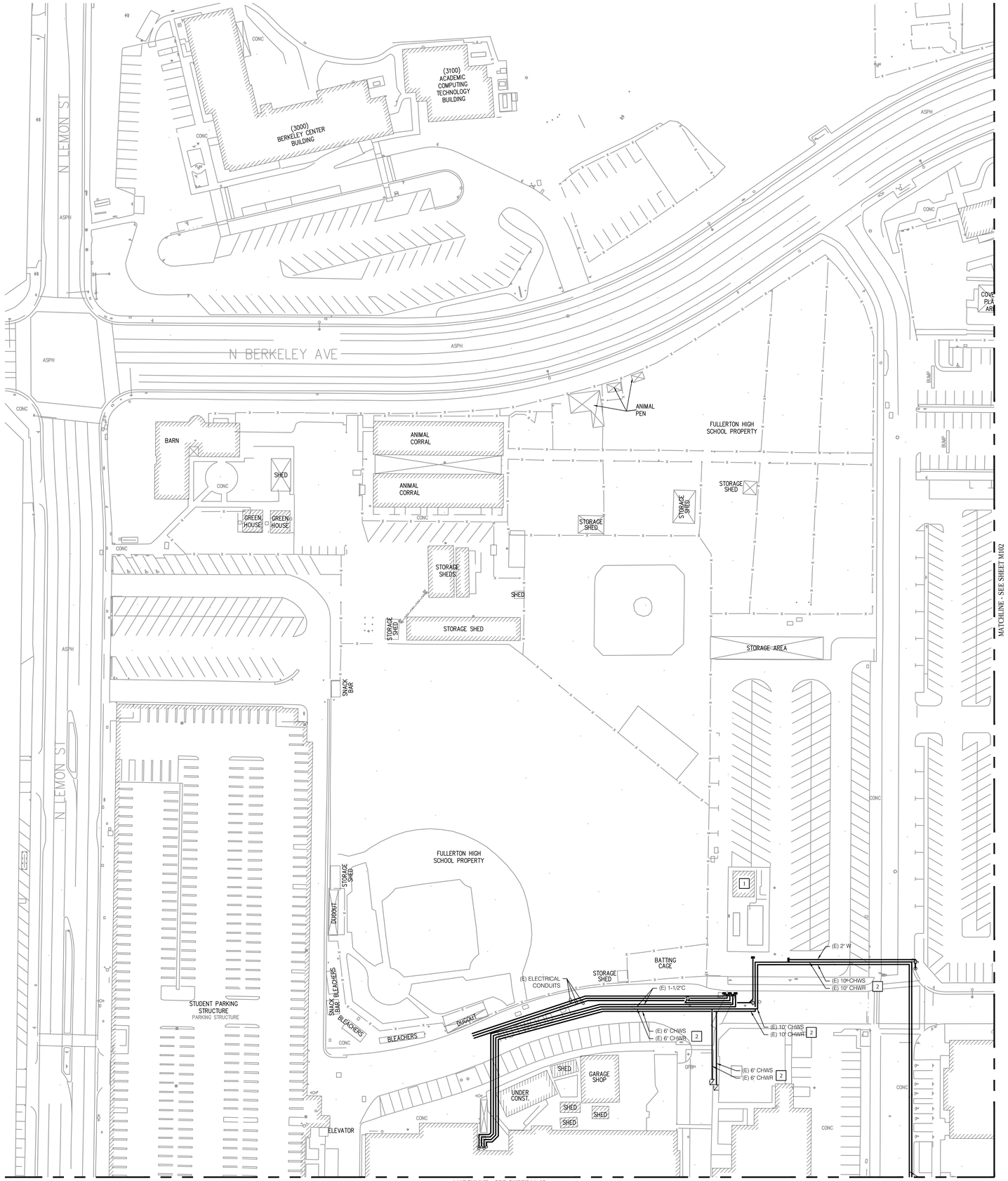

NOTES

1. LOT 3 CENTRAL PLANT
2. DIRECT BURIED CHILLED WATER LINES

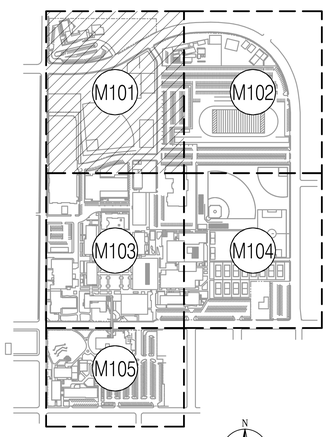

KEY MAP

SCALE: 1" = 40'

PSOMAS

555 South Flower Street, Suite 4300
Los Angeles, CA 90071
Tel. (213) 223-1400
Fax (213) 223-1444

Consultant

P2S Engineering, Inc.

5000 East Spring Street, 8th Floor
Long Beach, CA 90815-5218
T 562.497.2999 F 562.497.2990

www.p2seng.com

Project Title

SITE UTILITY

Owner

FULLERTON COLLEGE

321 E CHAPMAN AVENUE
FULLERTON, CA. 92832-2095

Revisions

Number	Description	Date

Designed
Drawn
Checked
Approved

Date 07/27/2017

Submittal

Scale 1"=40'

Sheet Title

Enlarged Site Mechanical Plan

Sheet Number

M101

P2S No. 8723

FILE PATH & NAME: R:\J8723\MECHANICAL\J8723_M101.DWG (JAMES VALIENTE)
PLOT: Thursday, July 20, 2017 5:08:17 PM

R:\J8723\Mechanical\J8723_M101.dwg, 7/20/2017 5:08:16 PM, AutoCAD PDF (General Documentation).pc3

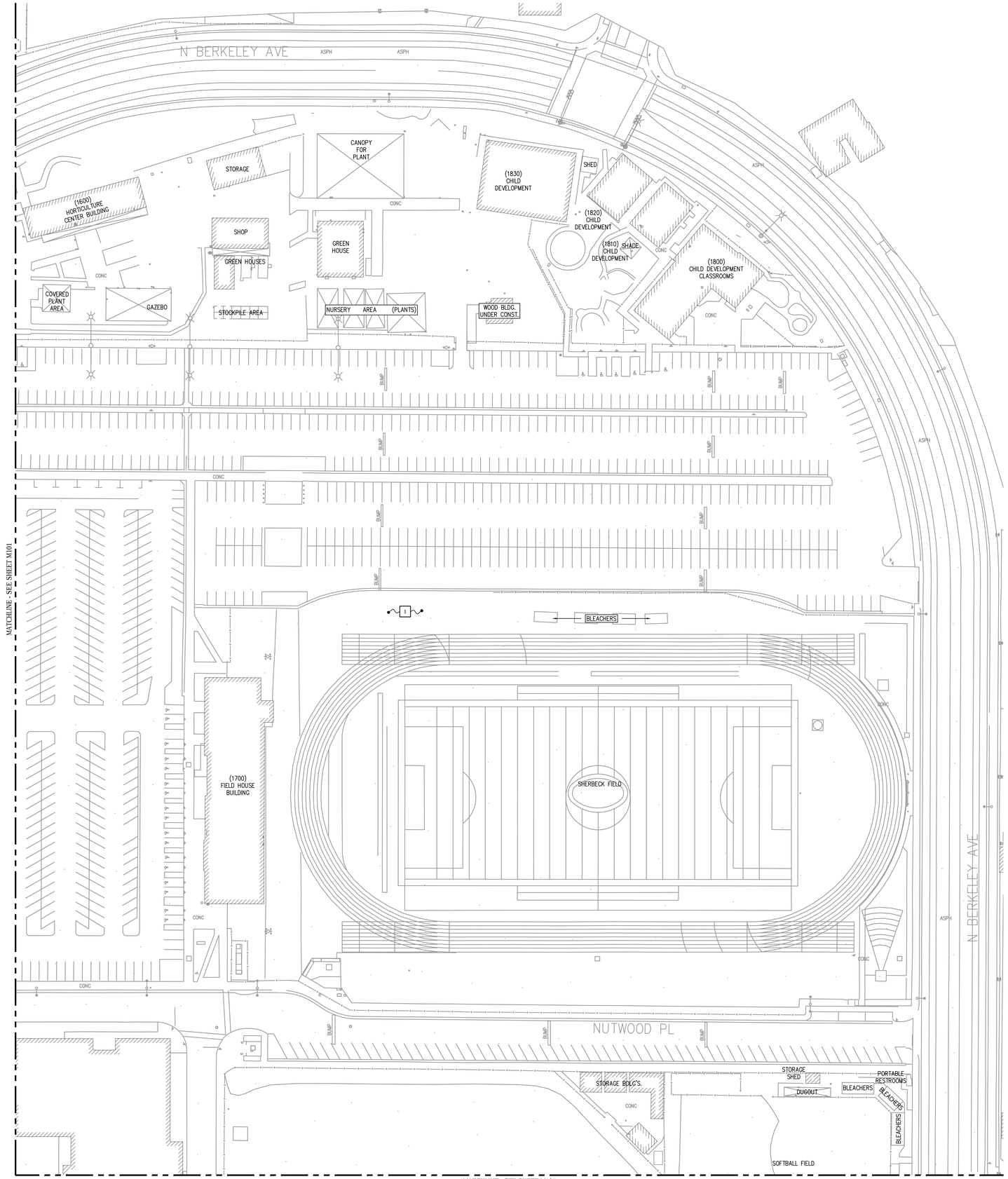

NOTES

1 NO CHILLED WATER LINES ON THIS SHEET.

SCALE: 1" = 40'

0 40

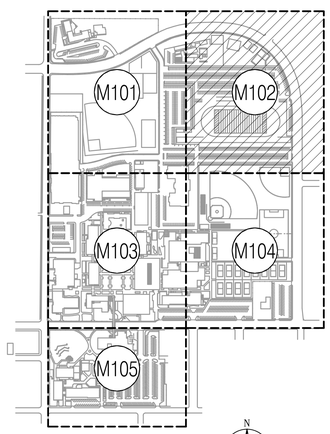

KEY MAP

PSOMAS

555 South Flower Street, Suite 4300
Los Angeles, CA 90071
Tel. (213) 223-1400
Fax (213) 223-1444

Consultant

P2S Engineering, Inc.

5000 East Spring Street, 8th Floor
Long Beach, CA 90815-5218
T 562.497.2999 F 562.497.2990

www.p2seng.com

Project Title

SITE UTILITY

Owner

FULLERTON COLLEGE

321 E CHAPMAN AVENUE
FULLERTON, CA. 92832-2095

Revisions

Number	Description	Date

Designed
Drawn
Checked
Approved

Date 07/27/2017

Submittal

Scale 1"=40'

Sheet Title

Enlarged Site Mechanical Plan

Sheet Number

M102

P2S No. 8723

FILE PATH & NAME: R:\J8723\MECHANICAL\J8723_M102.DWG ; JAMES VALIENTE
PLOT: Thursday, July 20, 2017 5:08:18 PM

R:\J8723\Mechanical\J8723_M102.dwg, 7/20/2017 5:08:17 PM, AutoCAD PDF (General Documentation).pc3

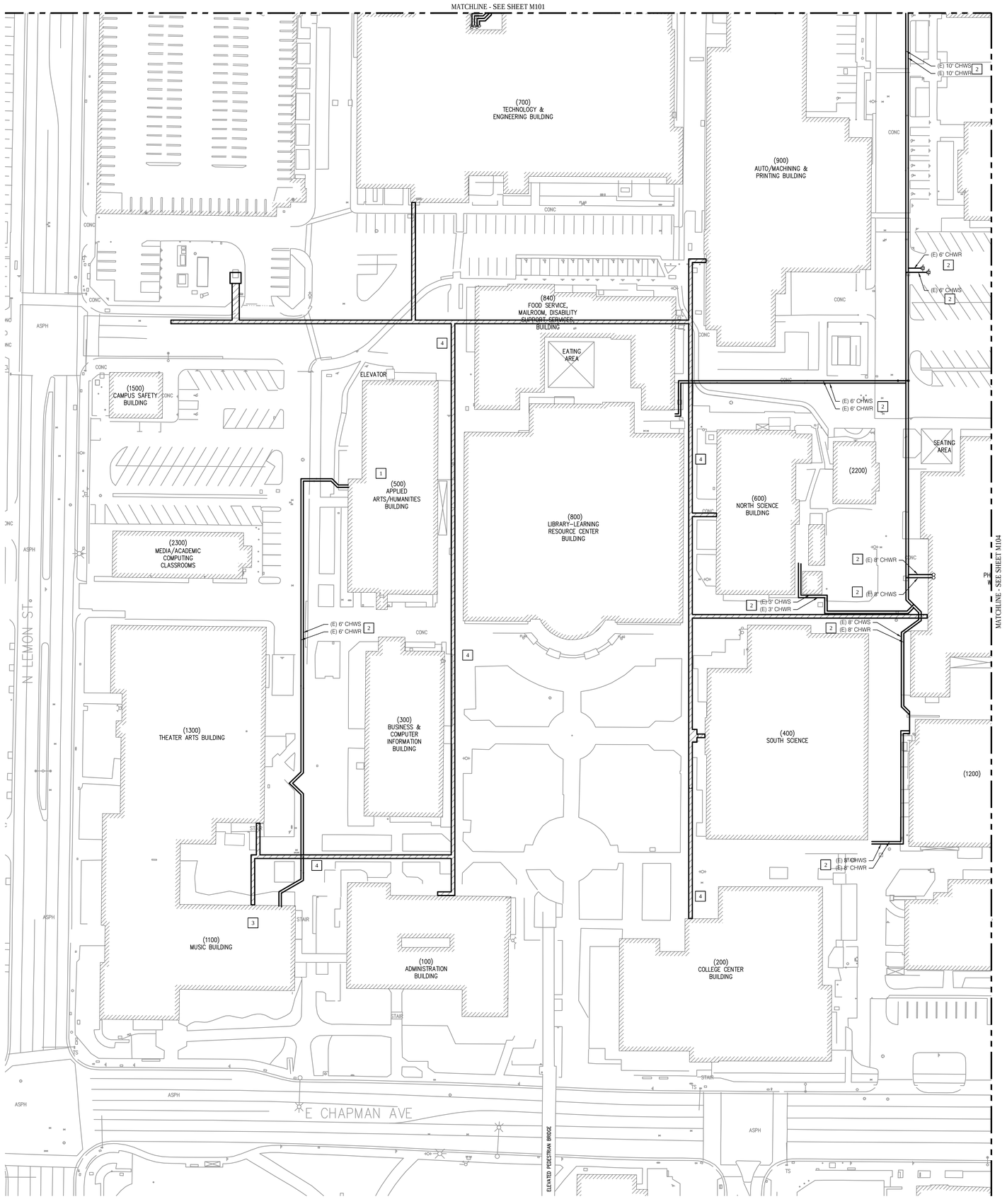

NOTES

1. BUILDING 500 CENTRAL PLANT
2. DIRECT BURIED CHILLED WATER LINES
3. BUILDING 1100 CENTRAL PLANT
4. CAMPUS TUNNEL SYSTEM WITH CHILLED WATER LINES ROUTED INTERNALLY.

SCALE: 1" = 40'

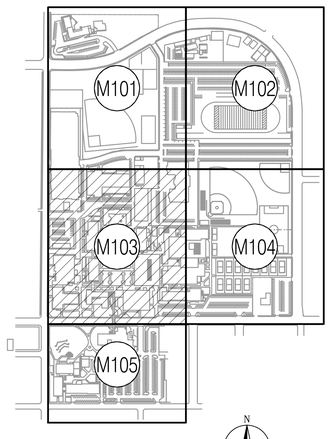

KEY MAP

P S O M A S

555 South Flower Street, Suite 4300
Los Angeles, CA 90071
Tel. (213) 223-1400
Fax (213) 223-1444

Consultant

p2s

P2S Engineering, Inc.

5000 East Spring Street, 8th Floor
Long Beach, CA 90815-5218
T 562.497.2999 F 562.497.2990

www.p2seng.com

Project Title

SITE UTILITY

Owner

FULLERTON COLLEGE

321 E CHAPMAN AVENUE
FULLERTON, CA. 92832-2095

Revisions

Number	Description	Date

Designed
Drawn
Checked
Approved

Date 07/27/2017

Submittal

Scale 1"=40'

Sheet Title

Enlarged Site
Mechanical Plan

Sheet Number

M103

P2S No. 8723

FILE PATH & NAME: R:\J8723\MECHANICAL\J8723_M103.DWG - JAMES VALIENS
PLOT: Thursday, July 20, 2017 5:08:20 PM

R:\J8723\Mechanical\J8723_M103.dwg, 7/20/2017 5:08:19 PM, AutoCAD PDF (General Documentation).pc3

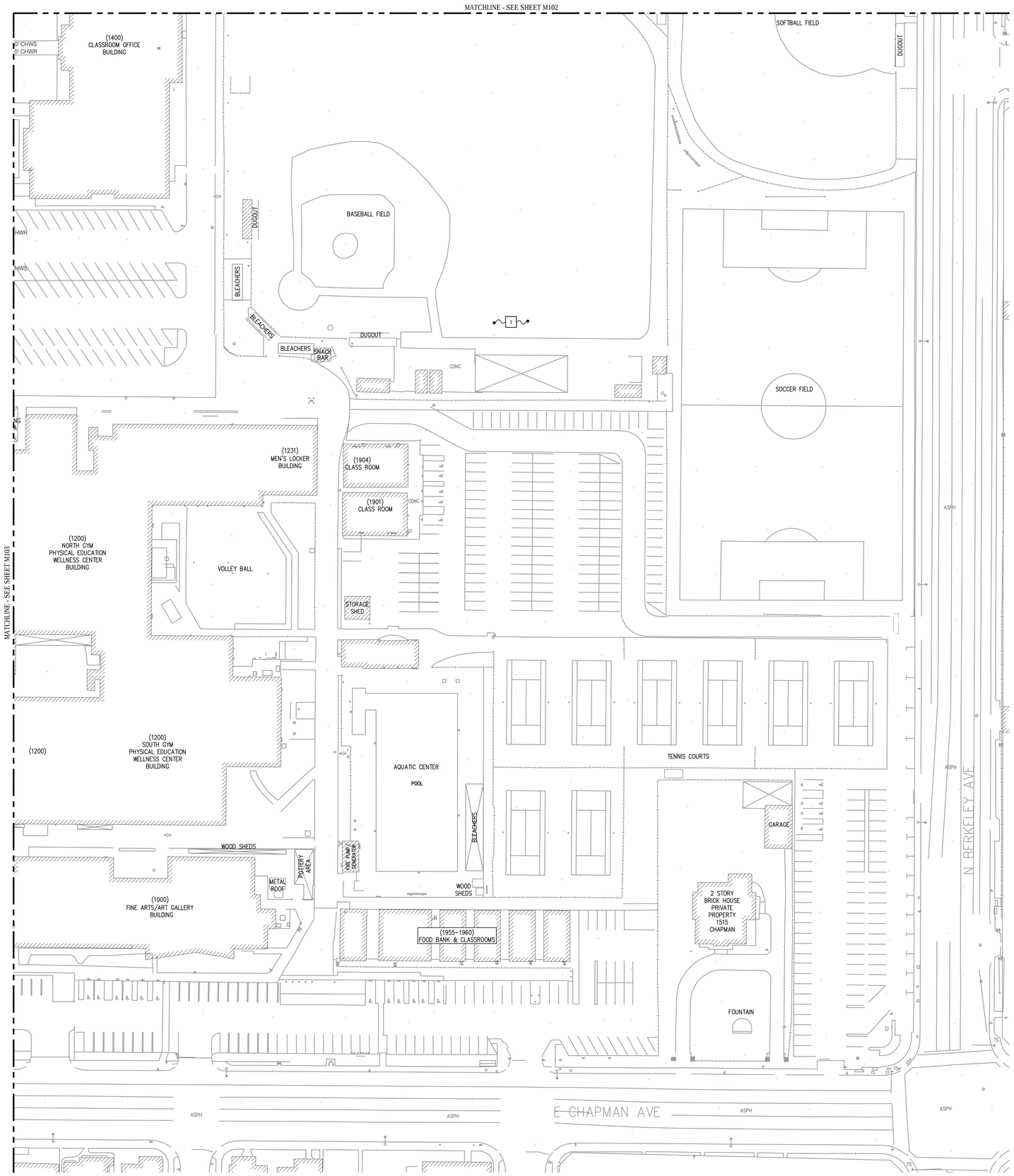

NOTES

1. NO CHILLED WATER LINES ON THIS SHEET.

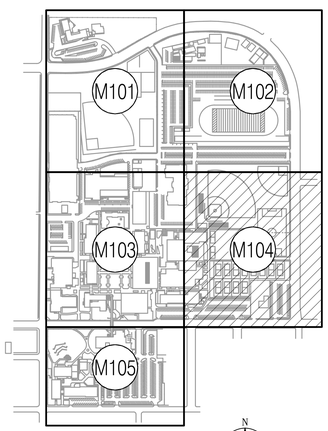

KEY MAP

SCALE: 1" = 40'
0 40

P S O M A S

555 South Flower Street, Suite 4300
Los Angeles, CA 90071
Tel. (213) 223-1400
Fax (213) 223-1444

Consultant

P2S Engineering, Inc.

5000 East Spring Street, 8th Floor
Long Beach, CA 90815-5218
T 562.497.2999 F 562.497.2990

www.p2seng.com

Project Title

SITE UTILITY

Owner

FULLERTON COLLEGE

321 E CHAPMAN AVENUE
FULLERTON, CA. 92832-2095

Revisions

Number	Description	Date

Designed
Drawn
Checked
Approved

Date 07/27/2017

Submittal

Scale 1"=40'

Sheet Title

Enlarged Site
Mechanical Plan

Sheet Number

M104

P2S No. 8723

FILE PATH & NAME: R:\J8723\MECHANICAL\J8723_M104.DWG JAMES VALENSI
PLOT: Thursday, July 20, 2017 5:06:21 PM

R:\J8723\Mechanical\J8723_M104.dwg, 7/20/2017 5:08:20 PM, AutoCAD PDF (General Documentation).pc3

NOTES

1. BUILDING 2100 CENTRAL PLANT.
2. DIRECT BURIED CHILLED WATER AND HEATING HOT WATER LINES.

MATCHLINE - SEE SHEET M103

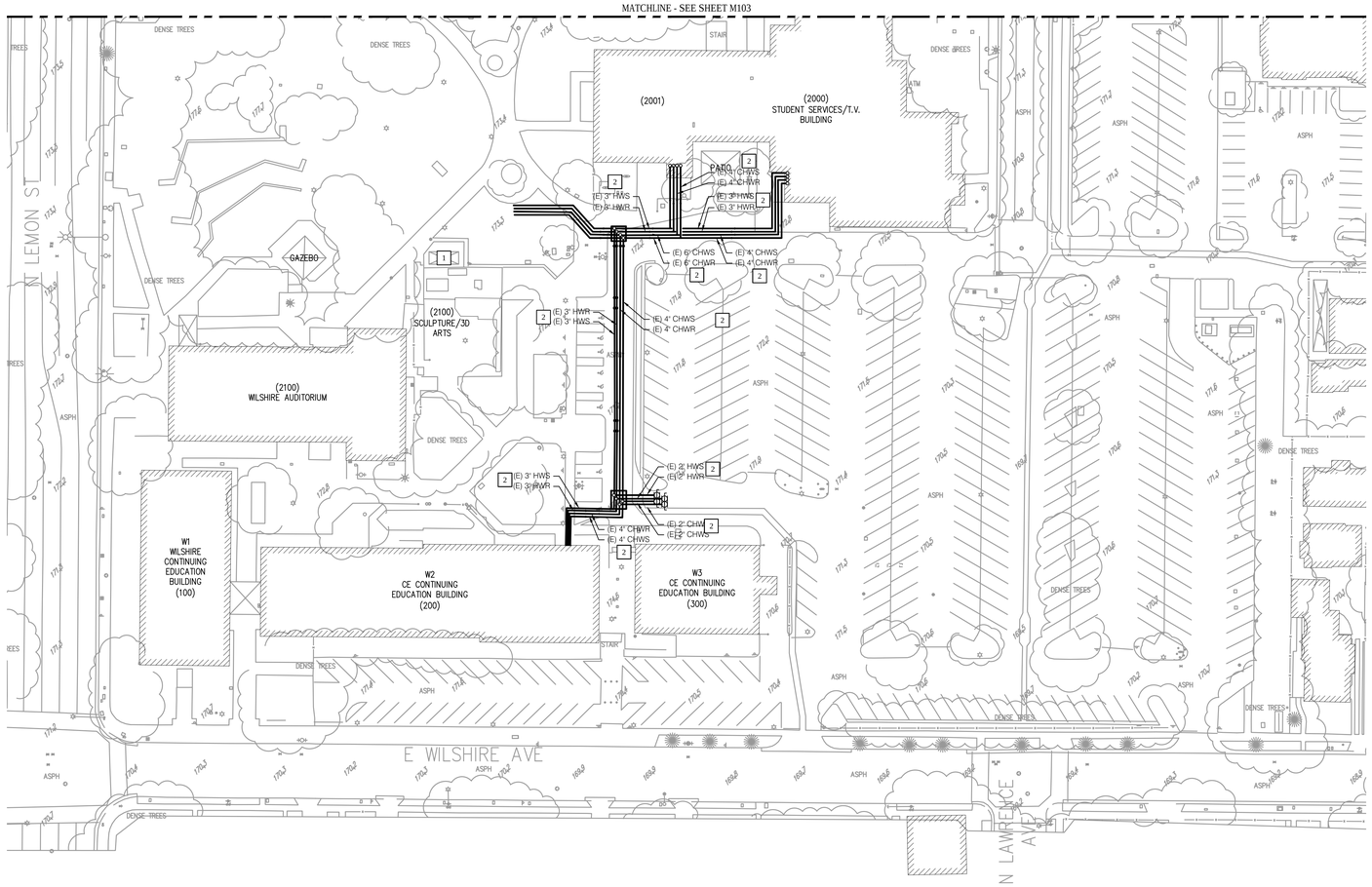

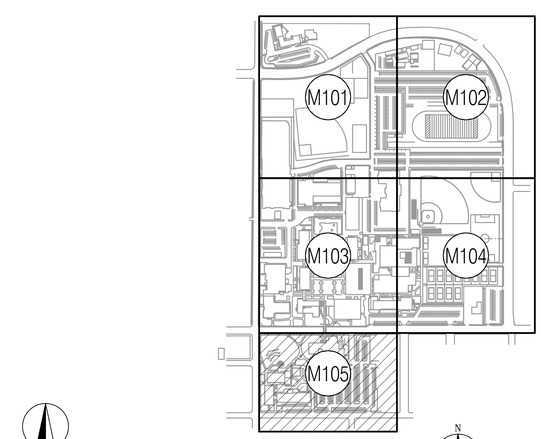

KEY MAP

SCALE: 1" = 40'
0 40

PSOMAS
555 South Flower Street, Suite 4300
Los Angeles, CA 90071
Tel. (213) 223-1400
Fax (213) 223-1444

Consultant

P2S Engineering, Inc.
5000 East Spring Street, 8th Floor
Long Beach, CA 90815-5218
T 562.497.2999 F 562.497.2990
www.p2seng.com

Project Title

SITE UTILITY

Owner

FULLERTON COLLEGE

321 E CHAPMAN AVENUE
FULLERTON, CA. 92832-2095

Revisions

Number	Description	Date

Designed
Drawn
Checked
Approved

Date 07/27/2017

Submittal

Scale 1"=40'

Sheet Title

Enlarged Site Mechanical Plan

Sheet Number

M105

P2S No. 8723

FILE PATH & NAME: R:\J8723\MECHANICAL\J8723_M105.DWG ; JAMES VALIENSI
PLOT: Thursday, July 20, 2017 5:08:23 PM